03M07D9

5280A REVERSIBLE COUNTER

OPERATING AND SERVICE MANUAL

HEWLETT hp PACKARD

HP 5280A

HEWLETT hp PACKARD

CERTIFICATION

The Hewlett-Packard Company certifies that this instrument was thoroughly tested and inspected and found to meet its published specifications when it was shipped from the factory. The Hewlett-Packard Company further certifies that its calibration measurements are traceable to the U.S. National Bureau of Standards to the extent allowed by the Bureau's calibration facility.

WARRANTY AND ASSISTANCE

All Hewlett-Packard products are warranted against defects in materials and workmanship. This warranty applies for one year from the date of delivery, or, in the case of certain major components listed in the operating manual, for the specified period. We will repair or replace products which prove to be defective during the warranty period. No other warranty is expressed or implied. We are not liable for consequential damages.

For any assistance contact your nearest Hewlett-Packard Sales and Service Office. Addresses are provided at the back of this manual.

OPERATING AND SERVICE MANUAL

MODEL 5280A
REVERSIBLE COUNTER

SERIALS PREFIXED: 640-

This manual applies directly to Model 5280A Reversible Counters having serial number prefix 640-.

OLDER INSTRUMENTS

This manual with changes provided in Section VII also applies to Models having prefix numbers 602 and 612.

SPECIAL ORDER 7TH AND 8TH DIGIT READOUT

This manual with changes provided in Section VII applies to special order instruments H02-5280A and H06-5280A instruments.

Copyright HEWLETT-PACKARD COMPANY 1967
1501 PAGE MILL ROAD, PALO ALTO, CALIFORNIA, U.S.A.

02393-1

Printed: FEB 1967

Digitized by the Internet Archive
in 2025

https://archive.org/details/manualsplus_05402

TABLE OF CONTENTS

I GENERAL INFORMATION 1-1
1-1. Introduction 1-1
1-3. Description 1-1
1-7. Equipment Supplied and Available 1-1
1-9. Identification 1-2
1-11. Terminology 1-2
1-13. Specifications 1-2

II INSTALLATION 2-1
2-1. Introduction 2-1
2-3. Unpacking and Inspection 2-1
2-5. Storage and Shipment 2-1
2-8. Rack Installation 2-1
2-10. Power Connection 2-2
2-13. Cooling 2-2

III OPERATION 3-1
3-1. Introduction 3-1
3-3. Digital Recorder 3-1

IV PRINCIPLES OF OPERATION 4-1
4-1. Introduction 4-1
4-3. The Diode 4-1
4-11. The Transistor 4-2
4-23. General Description 4-3
4-27. Reversible Counter Circuit Description 4-4
4-28. General 4-4
4-30. Directional Gates and Zero Crossing Assembly A1 4-4
4-31. General 4-4
4-33. Rules 4-4
4-35. Directional Gates 4-4
4-39. Main Gate 4-5
4-41. Remaining A1 Circuitry 4-5
4-43. Sign Drive Binary 4-5
4-45. Applying the Rules: What A1 Does 4-5
4-52. A2 Through A7 Reversible Decimal Counter Assembly (RDCA) 4-6
4-53. General 4-6
4-55. Circuit Configuration 4-6
4-57. Increase Counting Sequence 4-7
4-59. Decrease Counting Sequence 4-10
4-61. Resetting to Zero 4-10
4-63. Electrical Readout 4-10
4-65. BCD Decoding Sequence 4-11
4-67. Digital Display 4-11
4-70. Gate Control Assembly A10 4-12
4-71. General 4-12
4-73. Gate Amplifier 4-12
4-78. Gate Control 4-13
4-86. Overflow 4-13
4-89. Reset 4-13
4-94. Gate Control Amplifier Assembly A11 4-14
4-95. General 4-14
4-102. Polarity Switch 4-15
4-104. Power Supply: Rectifier Assembly A12; Regulator Assembly A13 4-15

V MAINTENANCE 5-1
5-1. Introduction 5-1
5-3. Instrument Cover Removal 5-1
5-5. Air Filter 5-1
5-7. Test Equipment 5-1
5-9. Assembly Designations and Connection Identification 5-2
5-11. In-Cabinet Performance Check 5-2
5-14. Power Supply Adjustment 5-2

TABLE OF CONTENTS

V MAINTENANCE (cont'd)
5-15. Troubleshooting 5-2
5-16. General 5-2
5-18. Substitution 5-3
5-20. Printed Circuit Component Replacement 5-3
5-22. Quick Check of Operation 5-3
5-24. Power Supply Voltages 5-4
5-26. Counter Doesn't Count 5-4
5-35. Counts When Main Gate is Supposed to be Closed 5-4
5-38. Troubleshooting the RDCA's 5-4
5-43. Troubleshooting the Gate Control Assembly 5-5

VI REPLACEABLE PARTS 6-1
6-1. Introduction 6-1
6-4. Ordering Information 6-1

VII MANUAL CHANGES 7-1
7-1. Manual Changes 7-1
7-3. H06-5280A (7-digit display) Special Order 7-1
7-5. H02-5280A (8-digit display) Special Order 7-1

VIII CIRCUIT DIAGRAMS 8-1
8-1. Introduction 8-1
8-3. Component Location 8-1
8-5. Waveforms 8-1
8-7. Dc Voltages 8-1

LIST OF ILLUSTRATIONS

1-1. Model 5280A and Accessories 1-0

2-1. Conversion for Rack Mounting 2-1

3-1. Front Panel Operating Controls, Connectors and Indicators 3-2
3-2. Rear Panel Operating Controls, Connectors and Indicators 3-3

4-1. Basic Diode Circuits 4-1
4-2. Transistor Operation 4-2
4-3. Basic Transistor Circuits 4-3
4-4. A1 Directional Gates and Zero Crossing Logic Diagram 4-5
4-5. Reversible Decimal Counter Assembly Logic Diagram 4-7
4-6. Increase Counting Sequence 4-8
4-7. Decrease Counting Sequence 4-9
4-8. Typical Reset Operation of Reversible Decimal Counter Assembly . . 4-10
4-9. Binary Coded Decimal Decoding Network 4-11
4-10. Gate Control Amplifier and Gate Control Logic Diagram 4-12
4-11. Reset Using Saturated NPN Transistor 4-14

5-1. Simplified Gate Control Schematic 5-5

6-1. Modular Cabinet Parts 6-16

7-1. Neon Lamp Polarity Indicators 7-1

8-1. Top Internal View 8-2
8-2. Bottom Internal View 8-3
8-3. General Notes for Schematic Diagrams 8-4
8-4. Overall Block Diagram 8-5
8-5. Directional Gates and Zero Crossing A1 8-7
8-6. Reversible Decimal Counter Assembly A2-A7 8-11
8-7. Gate Control Assembly A10 8-13
8-8. Gate Control Amplifier Assembly A11 8-15
8-9. Power Suppply: Rectifier Assembly A12; Regulator Assy A13 8-17

LIST OF TABLES

1-1. Equipment Supplied 1-1
1-2. Equipment Available 1-1
1-3. RDCA Increase Truth Table 1-2
1-4. RDCA Decrease Truth Table 1-2
1-5. 4-Line BCD Code 1-2
1-6. Specifications 1-3

3-1. Summary of Connectors to Digital Recorder Jack 3-1

4-1. Assembly Designations 4-4
4-2. Truth Table for Increase and Decrease Counting Sequences 4-6
4-3. BCD Output Truth Table 4-11
4-4. Power Supplies 4-15
5-1. Recommended Test Equipment 5-1
5-2. Assembly Designations 5-2
5-3. Power Supply Voltages 5-2
5-4. In-Cabinet Performance Check 5-7

6-1. Replaceable Parts 6-2
6-2. Reference Designation Index 6-7

8-1. Assembly Designations 8-1

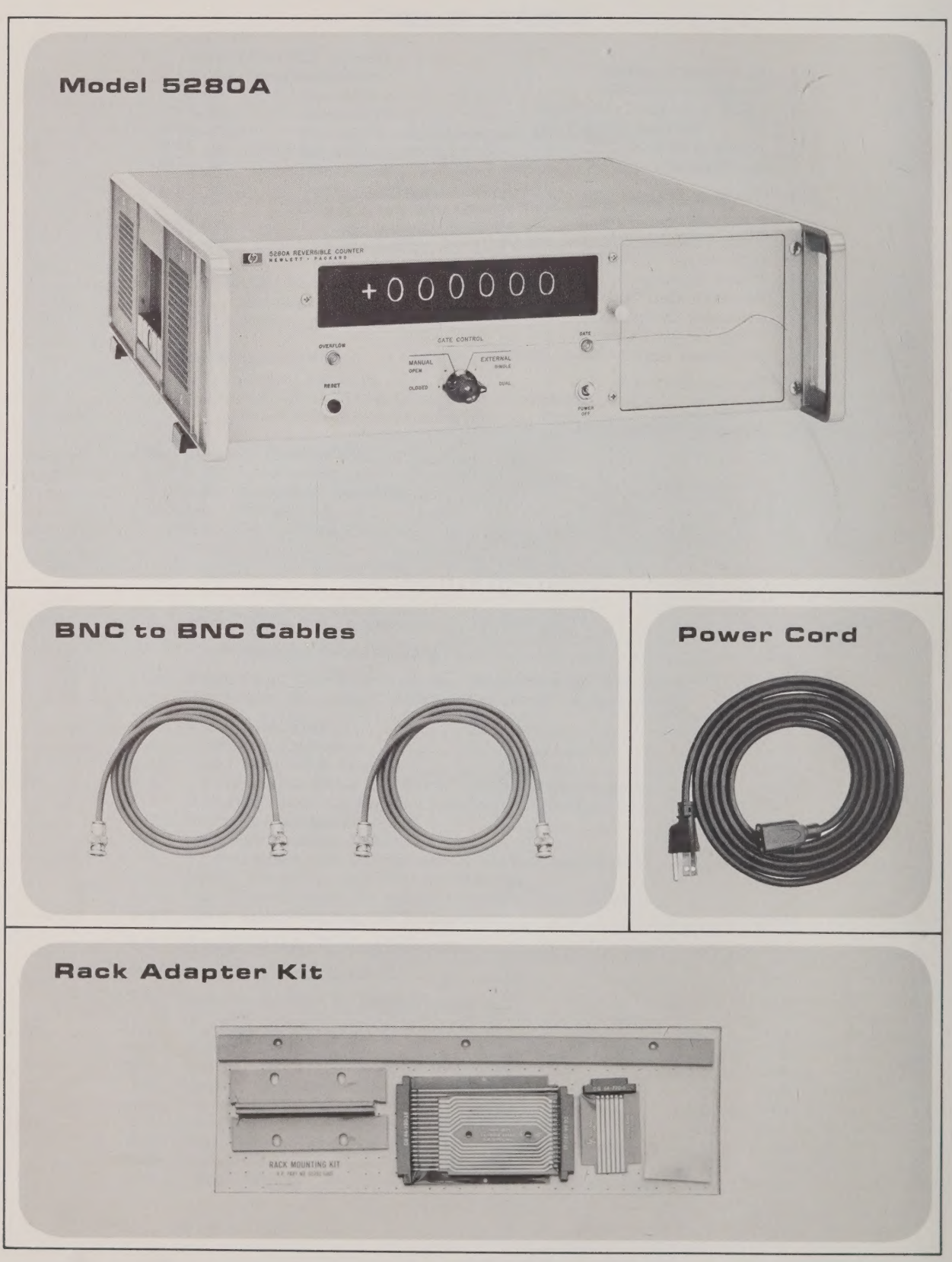

Figure 1-1. Model 5280A and Accessories

SECTION I
GENERAL DESCRIPTION

1-1. INTRODUCTION.

1-2. CONTENT. This manual provides complete instructions for the installation, operation, and maintenance of your Hewlett-Packard Model 5280A Reversible Counter. Eight sections of information are included as follows:

Section I GENERAL INFORMATION is an introduction to the Reversible Counter including: specifications; terminology, and information on equipment supplied and available.

Section II INSTALLATION covers: unpacking; storage and shipment; rack installation; power connection; and cooling.

Section III OPERATION provides a description of operational controls, connectors, and indications.

Section IV PRINCIPALS OF OPERATION is a detailed discussion of the theory of the circuits used in the Reversible Counter.

Section V MAINTENANCE contains performance check, adjustment and troubleshooting procedures.

Section VI REPLACEABLE PARTS lists parts for the Reversible Counter both by reference designation and by HP Part Number.

Section VII MANUAL CHANGES backdates the manual for use with older instruments and provides information for optional instruments.

Section VIII SCHEMATIC DIAGRAMS contains circuit diagrams with waveforms, dc voltages, and component location.

1-3. DESCRIPTION.

1-4. The Hewlett-Packard 5280A is a Reversible Counter with plug-in capabilities. With the presently available 5285A Universal Input plug-in the Reversible Counter may be used to totalize individual frequencies, totalize the difference between two input signals, totalize the sum of two input signals, totalize one signal with the direction of the count as a function of the second signal. The frequency range is dc to 2 MHz. The plug-in design of the Reversible Counter provides flexibility in input functions since the basic counter will accept all future plug-ins designed for reversible counting applications.

1-5. The Model 5280A provides these additional features:

a. Three gating modes selected by front panel GATE CONTROL switch: MANUAL OPEN and CLOSED; EXTERNAL SINGLE; and EXTERNAL DUAL. EXTERNAL gate control is by externally applied signal.

b. Remote reset by contact closure or saturated NPN transistor to ground.

c. Six-digit display using rectangular (narrow) digital display tubes. An additional two digits of display are available on special order.

d. Overflow of the displayed readout is indicated by a front panel neon light.

e. Plus or minus algebraic sign display using a rectangular (narrow) sign display (+ or -) tube.

f. Digital Recorder output provides: four-line binary-coded-decimal output, voltage references, print command, overflow and plus or minus sign information. Digital Recorder information may be used to drive: digital recorder (HP Model 562A), remote readout, or data processing equipment.

1-6. The 5280A features solid state design, low power consumption, small size (5-1/4 inch panel), light weight (29 lbs), easy conversion for rack mounting, and modular plug-in circuit boards for simplified maintenance.

1-7. EQUIPMENT SUPPLIED AND AVAILABLE.

1-8. Equipment supplied with your Model 5280A Reversible Counter is listed in Table 1-1 (Equipment Supplied). Table 1-2 (Equipment Available), lists equipment available for use with your Model 5280A Reversible Counter.

Table 1-1. Equipment Supplied

Description	Identification No.
Two cables, 4' (122 cm) long, male BNC connectors	HP Part No. 10503A
Detachable power cord 7½' (231 cm) long, NEMA plug	HP Part No. 8120-0078
Rack-Mount Kit	HP Part No. 05280-6007

Table 1-2. Equipment Available

Description	Identification No.
DIGITAL RECORDER 50-pin mating connector	Amphenol No. 57-30500
Universal Input Plug-in	HP Model 5285A
Plug-in Extension Cable	HP Model 10506B

1-9. IDENTIFICATION.

1-10. Hewlett-Packard uses a two-section, eight-digit serial number (000-00000). If the first three digits of the serial number of your instrument do not appear on the title page of this manual, there are differences between the manual and your instrument which are described in a change sheet included with the manual.

1-11. TERMINOLOGY.

1-12. The definitions of the following terms apply to those terms as they will be used throughout the manual.

a. BINARY. A bistable multivibrator (flip-flop) used to count or store binary information. The output of each binary is a "bit" or binary digit.

b. "1" STATE. Output of binary true.

c. "0" STATE. Output of binary false.

d. Truth Table. A tabular listing of the allowable true ("1" state) or false ("0" state) states of logic elements or functions.

e. Reversible Decimal Counter Assembly (RDCA). A four-binary counter circuit arranged to count from zero up to nine or from zero down to one, and provide digital display and four-line BCD readouts. The RDCA increase Truth Table (Table 1-3) shows the ten allowable states for counting 0 through 9. The RDCA Decrease Truth Table (Table 1-4) shows the ten allowable states for counting down 0 through 1.

f. 4-LINE BCD. Four-line binary-coded-decimal, decimal information coded in such a way that each decimal digit may be represented by a unique combination of "1" and "0" states. The 1-2-4-8 "1" state positive truth table (Table 1-5) gives the decimal weight for each binary digit. These states are listed in an order which presents the most significant digit first.

1-13. SPECIFICATIONS.

1-14. Table 1-6 contains all technical specifications for the HP Model 5280A Reversible Counter.

Table 1-3. RDCA Increase Truth Table

Decimal Count	D	C	B	A
0	0	0	0	0
1	0	0	0	1
2	0	0	1	0
3	0	0	1	1
4	0	1	1	0
5	0	1	1	1
6	1	1	0	0
7	1	1	0	1
8	1	0	0	0
9	1	0	0	1

Table 1-4. RDCA Decrease Truth Table

Decimal Count	D	C	B	A
0	0	0	0	0
9	1	0	0	1
8	1	0	0	0
7	1	1	0	1
6	1	1	0	0
5	0	1	1	1
4	0	1	1	0
3	0	0	1	1
2	0	0	1	0
1	0	0	0	1

Table 1-5. 4-Line BCD Code

"0" State -			"1" State +	
Decimal Count	D = 8	C = 4	B = 2	A = 1
0	0	0	0	0
1	0	0	0	1
2	0	0	1	0
3	0	0	1	1
4	0	1	0	0
5	0	1	0	1
6	0	1	1	0
7	0	1	1	1
8	1	0	0	0
9	1	0	0	1

Table 1-6. Specifications

GENERAL

Range:
Dc to 2 MHz Channel A or Channel B (see 5285A specifications for details concerning other input requirements).

Registration:
6 long-life rectangular Nixie tubes (7th and 8th digit of readout optional). + and - indication by long-life rectangular Nixie tube. Overflow indication by front panel neon light.

Reset:
Remote by contact closure or saturated NPN transistor to ground. Input via rear panel BNC. Manual by front panel pushbutton.

Reset Time: Less than 10 μsec.

Inhibit: Start channel is inhibited during reset time with the function switch in the DUAL position only. Inhibit released at end of reset time.

Gate Light: Gate light indicates main gate open.

GATE CONTROL

Manual: Controlled by front panel function switch for OPEN and CLOSED positions.

External Dual
Input: separate BNC's on rear panel for START and STOP inputs.
Sensitivity: Sine wave 1V rms; pulse 2V p-p.
Impedance: Approx 100K ohms, 25 pf in shunt.
Trigger Level: +10V to -10V, adjustable at rear panel. Independent controls on each input.
Polarity: + or - rear panel switch selects triggering slope.

External Single:
Input: START BNC on rear panel.
Sensitivity: Sine wave 1V rms; pulse 2V p-p.
Impedance: Approx 100K ohms, 25 pf in shunt.
Trigger Level: +10V to -10V, adjustable at rear panel.
Polarity: + or - rear panel switch selects gate open polarity.
Gate: (+) Opens when input is positive with respect to the trigger level. Closes when input is negative with respect to trigger level. (-) Inverse of (+). Manually switched dc voltage is a satisfactory gating input.

PRINTER OUTPUT

Output*: 4-line 1-2-4-8 BCD.
"0" State Level: approx -14 volts.
"1" State Level: approx +14 volts.

Impedance: 100K ohms each line.
Reference Levels: 0 V for "0" and "1" states.
Print Command: Positive 15-volt step from -15 volts to 0 volts.

*4-line BCD outputs for the optional 7th or 8th digits of readout available on special order only.

Hold-off Requirements:
Externally applied level change from 0 V or more negative than 0V to +10V (effective with function switch in DUAL position only).

Overflow:
Single line output, 100K ohms impedance. "OFF" level approx. +17V, "ON" level approx -13V.

± Nixie Sign (indicates sign of count):
Single line output, 100K ohms impedance. + level approx -15V, - level approx +13 volts.

PHYSICAL SPECIFICATIONS

Rear Panel Connectors:
BNC "START" and "STOP" gate inputs. BNC rear terminal in parallel (RTIP) inputs for "A" and "B" channels of the 5285A Universal Input plug-in. BNC input for external RESET. BNC MONITOR outputs for channel A and B triggers. 50-pin mating connector for BCD output. Amphenol #57-30500-375 (HP #1251-0086).

Rear Panel Controls:
± polarity switch for single and dual gate control input. Trigger level adjustments for "START" "STOP" inputs, ± 10 volts.

Dimensions:

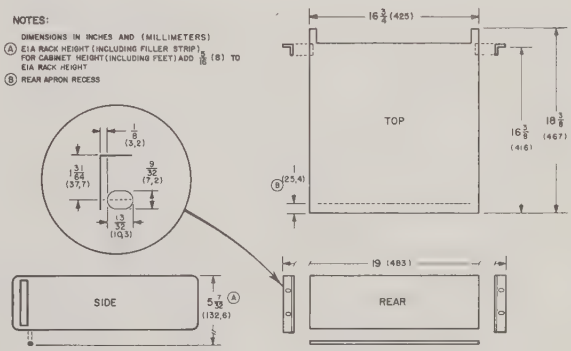

Weight: Net 29 lbs (13, 2 kg). Shipping 40 lbs (18, 1 kg). (Weights include plug-in).

Power: 115 or 230V ± 10%, 50 to 60 Hz**, 110 watts (with 5285A plug-in).

Operating Temperature Range: (5280A/5285A): 0°C (32°F) to +65°C (+149°F).

ACCESSORIES FURNISHED

Two cables, 4 ft (122 cm) long, male BNC connectors.
Detachable Power Cord, 7-1/2 ft (231 cm) long, NEMA plug.
Circuit Board Extenders.
Rack Mount Kit.

** Line frequency limit imposed by cooling fan.

SECTION II
INSTALLATION

2-1. INTRODUCTION.

2-2. This section contains information on unpacking, inspection, repackaging, storage, and installation.

2-3. UNPACKING AND INSPECTION.

2-4. If the shipping carton is damaged, ask that the carrier's agent be present when the instrument is unpacked. Inspect the instrument for damage(scratches, dents, broken knobs, etc). If the instrument is damaged or fails to meet specifications (Performance Check, Paragraph 5-11). notify the carrier and the nearest Hewlett-Packard field office immediately (field offices are listed at the back of this manual). Retain the shipping carton and the padding material for the carrier's inspection. The field office will arrange for the repair or replacement of your instrument without waiting for the claim against the carrier to be settled.

2-5. STORAGE AND SHIPMENT.

2-6. PACKAGING. To protect valuable electronic equipment during storage or shipment always use the best packaging methods available. Your Hewlett-Packard field office can provide packing material such as that used for original factory packaging. Contract packaging companies in many cities can provide dependable custom packaging on short notice. Here are two recommended packaging methods:

a. RUBBERIZED HAIR. Cover painted surfaces of instrument with protective wrapping paper. Pack instrument securely in strong corrugated container (350 lb/sq in. bursting test) with 2-inch rubberized hair pads placed along all surfaces of the instrument. Insert fillers between pads and container to ensure a snug fit. Mark the box "Delicate Instrument" and seal with strong tape or metal bands.

b. EXCELSIOR. Cover painted surfaces of instrument with protective wrapping paper. Pack instrument in strong corrugated container (350 lb/sq in. bursting test) with a layer of excelsior about 6 inches thick packed firmly against all surfaces of the instrument. Mark the box "Delicate Instrument" and seal with strong tape or metal bands.

2-7. ENVIRONMENT. Temperatures during storage and shipment should normally be limited as follows:

a. Maximum altitude 20, 000 feet.

b. Minimum temperature -40°F (-40°C).

c. Maximum temperature 167°F (75°C).

2-8. RACK INSTALLATION

2-9. The Model 5280A is ready for bench operation as shipped from the factory. Additional parts necessary for rack mounting are packaged with the instrument. To convert for rack installation, refer to Figure 2-1 and proceed as follows:

a. Remove tilt stand.

b. Remove feet (press the foot-release button, slide foot toward center of instrument, and lift off).

c. Remove adhesive-backed trim strips at front end of sides.

d. Attach filler strip along bottom edge of front panel.

e. Attach flanges to front end of sides (larger corner notch toward bottom of instrument). Instrument is now ready to mount in standard rack.

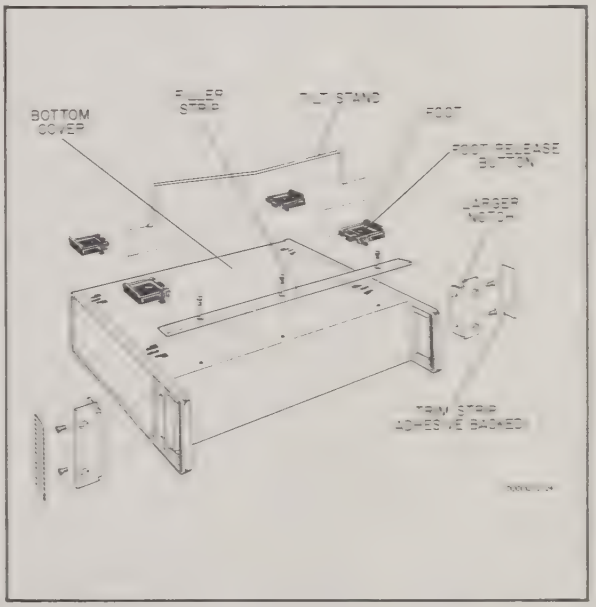

Figure 2-1. Conversion for Rack Mounting

CAUTION

Ambient temperature in rack during operation should not exceed a maximum of 149°F (65°C). Be sure instrument position in rack permits air circulation to intake on the rear of instrument and that nearby instruments do not discharge hot air near intakes.

2-10. POWER CONNECTION.

2-11. LINE VOLTAGE. The 5280A may be operated from either 115- or 230-volt (± 10%) power lines. A slide switch on the rear panel permits quick conversion for operation from either voltage. To change the switch position, insert thin-blade screwdriver in slot on the switch and slide switch toward desired operating position. The switch will snap into position. The instrument is in 115-volt position when the "115" appears on the switch; 230-volt position when the "230" appears on the switch. Use 1.6 ampere fuse (HP Part No. 2110-0005) for 115-volt operation and .8 ampere fuse (HP Part No. 2110-0020) for 230-volt operation.

2-12. POWER CABLE. The 5280A is equipped with a detachable 3-wire power cable. Proceed as follows for installation:

a. Connect flat plug (three-socket connector) to ac line jack at rear of instrument.

b. Connect plug (two-blade with round grounding pin) to three-wire (grounded) power outlet. Exposed portions of instrument are grounded for safety; when only a two-blade outlet is available, use connector adapter (HP Stock No. 1251-0048), and connect short wire from side of adapter to ground.

2-13. COOLING.

2-14. The Model 5280A uses forced air cooling. The air intake and filter are located on the rear panel of the instrument. Inspect the filter regularly; clean the filter before it becomes dirty enough to restrict air flow. (See Paragraph 5-5 for instructions on filter care.)

SECTION III
OPERATION

3-1. INTRODUCTION.

3-2. The Model 5280A is a Reversible Counter with plug-in capabilities and a minimum number of controls. Most of the operational controls are located on the plug-in units and therefore detailed operating instructions are given in the plug-in manuals. Figures 3-1 and 3-2 identify front and rear panel operating controls, connections, and indications and provide a short description of their function.

3-3. DIGITAL RECORDER

3-4. The 50-pin DIGITAL RECORDER jack (J9) permits connection to the HP H04-580A Digital to Analog Converter, and HP Model 562A Digital Recorder through a 50-conductor cable (HP Part No. 562A-16C) supplied with these instruments. Signals for other data processing equipment can also be taken from this jack. Mating connector is Amphenol No. 57-30500. Signals available and external signals required are given in Table 3-1.

Table 3-1. Summary of Connectors to Digital Recorder Jack

Digital Recorder Signals		J9 Pin No.
Digit	Weight	
(right end) 10^0 (units)	1	1
	2	2
	4	26
	8	27
10^1 (tens)	1	3
	2	4
	4	28
	8	29
10^2 (hundreds)	1	5
	2	6
	4	30
	8	31
10^7 (thousands)	1	7
	2	8
	4	32
	8	33
10^4 (ten thousands)	1	9
	2	10
	4	34
	8	35
10^5 (hundred thousands)	1	11
	2	12
	4	36
	8	37
(special order) 10^6 (millions)	1	13
	2	14
	4	38
	8	39
(special order) (ten millions)	1	15
	2	16
	4	40
	8	41

Digital Recorder	J9 Pin No.
± Sign (indicates sign of count: 100K ohms impedance; + sign level about -15V - sign level about +13V	17
Overflow: 100K ohm impedance Off level about +15V On level about -13V	20, 45
Inhibit signal input: from 0 volts or more negative than 0 volts to +10 volts supplied from an external source to prevent reset; causes count to hold (effective in EXTERNAL DUAL gate mode only)	22
Reference Levels: 0 volts for "0" and "1" states	24, 25
Ground (0 volts)	50
No connections	18 19 21 42 43 44 46 47 48 49

FRONT PANEL

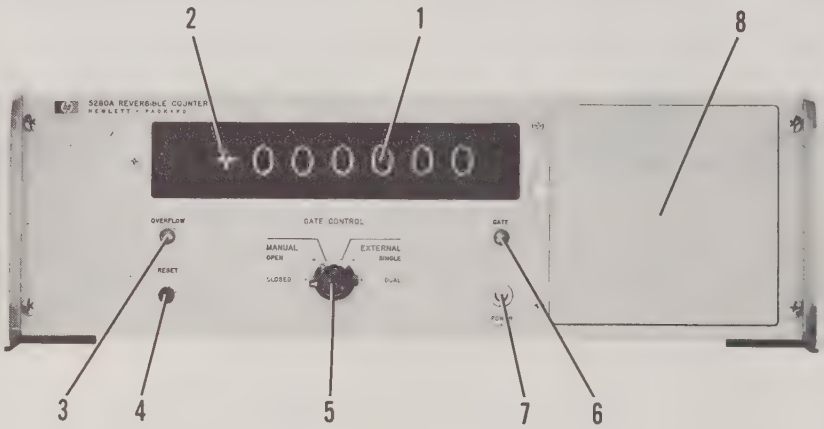

1. DIGITAL DISPLAY. The six Reversible Decimal Counter Assemblies provide a display of the counted signal.

2. SIGN DISPLAY: indicates algebraic sign of the Digital Display.

3. OVERFLOW LAMP: indicates Digital Display overflow and lights when the left-most digital display tube has exceeded the count of 9.

4. RESET PUSHBUTTON: resets Digital Display, overflow, and gate flip-flop.

5. GATE CONTROL SWITCH: selects one of three available modes: MANUAL, EXTERNAL SINGLE, or EXTERNAL DUAL. EXTERNAL SINGLE allows control of the gate by a voltage level connected to the rear panel START connector. A voltage level higher than the trigger level opens the gate and a voltage level lower than the trigger level closes the gate. EXTERNAL DUAL allows gate control with separate start-stop inputs. The control signal to start-stop rear input connectors may be either a level change or a pulse. With the start-stop connected together externally a series of pulses from a single source can be used as a control signal.

6. GATE LAMP: indicates that the main gate is open and the Reversible Counter will register inputs from plug-in.

7. AC POWER SWITCH: turns instrument on and off.

8. PLUG-IN COMPARTMENT: receives plug-in unit which contains most of the operational controls. To install plug in: 1) turn power off, 2) loosen knurled screw at side of compartment, 3) slide plug-in unit into place and tighten knurled screw.

Figure 3-1. Front Panel Operating Controls, Connectors and Indicators

REAR PANEL

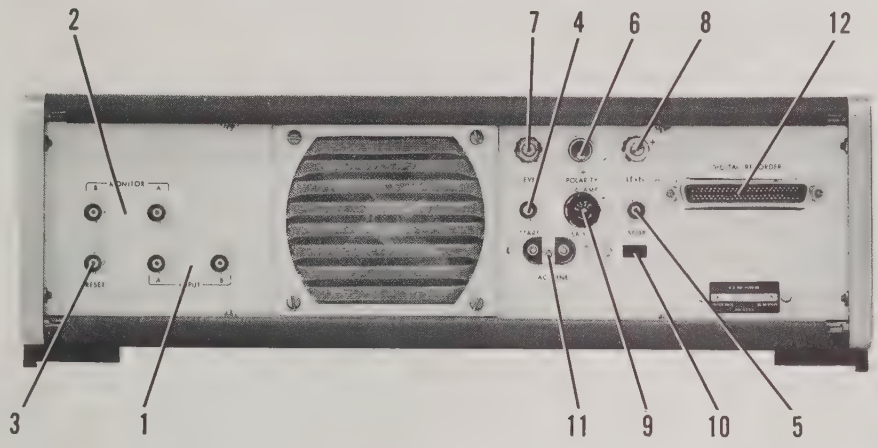

1. INPUTS A and B; provide rear panel inputs to plug-in units (see plug-in manuals for details).

2. MONITOR OUTPUTS A and B: provide monitoring of the plug-in units (see plug-in manuals for details).

3. RESET INPUT: permits remote reset by contact closure to ground or a saturated NPN transistor to ground.

4. GATE START INPUT: EXTERNAL DUAL permits START by applying either a level change or a pulse. EXTERNAL SINGLE permits both START and STOP. With + POLARITY the gate opens when input is positive with respect to the trigger level and closes when the input is negative with respect to the trigger level. - POLARITY operation is inverse of + POLARITY.

5. GATE STOP INPUT: permits remote gate control (STOP in the EXTERNAL DUAL gate mode) by applying either a level change or a pulse.

6. POLARITY SWITCH: selects + or - polarity of STOP and START gate inputs.

7. LEVEL ADJUSTMENT: trigger level adjustment for GATE START, -10V to +10V range, 1 V rms sensitivity.

8. LEVEL ADJUSTMENT: trigger level adjustment for GATE STOP, -10V to +10V range, 1 V rms sensitivity.

9. LINE FUSE: provides overload protection. It should be 1.6 ampere for 115 volt operation and .8 ampere for 230 volt operation.

10. LINE VOLTAGE SWITCH: selects either 115 or 230 Vac line; insert narrow blade and slide left for 115V; slide right for 230V.

11. AC LINE CONNECTOR: connects to flat plug on power cable.

12. DIGITAL RECORDER CONNECTOR: supplies BCD information for a digital recorder, digital to analog converter, or other processing equipment.

Figure 3-2. Rear Panel Operating Controls, Connectors and Indicators

SECTION IV
PRINCIPLES OF OPERATION

4-1. INTRODUCTION.

4-2. This section describes the operation of the Model 5280A Reversible Counter. Basic circuits used in the Reversible Counter are described first (Paragraphs 4-3 to 4-22). A general description of the Reversible Counter is given in Paragraphs 4-23 through 4-26. In Paragraphs 4-27 through 4-111 at the end of the section each assembly is described in order of its assembly designation (A ____).

4-3. THE DIODE.

4-4. GENERAL. Semiconductor diodes are used in signal-handling circuits and in power supply rectifier and regulator circuits.

4-5. THE "OR" GATE. Two or more diodes are sometimes used as an OR gate. The OR gate is a multiple-input circuit which requires only one input to produce an output. Figure 4-1A shows some OR gate configurations.

4-6. THE "AND" GATE. The AND gate or coincidence circuit is a multiple-input circuit which requires the presence of all input signals to produce an output. Figure 4-1B shows an AND gate configuration in which an input signal is passed only when a properly polarized control voltage is applied.

4-7. THE "INHIBIT" GATE. The signal normally passes through an INHIBIT gate; adding a second signal closes the gate and prevents the signal from going through. One of the most common forms of the INHIBIT gate is the series gate shown in Figure 4-1C. If the diode is biased off the gate is closed and pulses do not reach the decade divider or decimal counter; when the diode is biased on, the pulses go through the gate and reach the decade divider or decimal counter.

4-8. LIMITER OR CLIPPER. The limiter or clipper is a circuit which removes positive or negative peaks of waveforms. It can be used either as a waveform shaping circuit or as a protective device to prevent excessive voltages from reaching a sensitive circuit. Figure 4-1D shows a limiter which prevents the negative peak of a pulse from going more negative than about -0.6 volt. Note that for a conducting silicon diode the cathode voltage is about 0.6 to 0.8 volt more negative than the anode.

4-9. CLAMPER OR DC RESTORER. The clamper or dc restorer is a circuit which establishes either the positive or negative peak of a waveform at a particular dc reference voltage; in other words, it provides a definite baseline voltage for the waveform. Figure 4-1E shows a clamper which provides a baseline of about +20 volts for a negative pulse.

4-10. REGULATOR. A diode regulator uses either the constant reverse-bias breakdown voltage characteristic of a breakdown diode or the constant forward-bias voltage drop characteristic of a silicon diode. Power supply reference voltages are generally provided by breakdown diodes which maintain a constant voltage when supplied with a reverse-bias voltage greater than their specified breakdown voltage. Regulated voltages can also be provided by a forward-biased silicon diode which maintains a constant 0.6 to 0.8 volt drop. Figure 4-1F shows connections for both types of diodes.

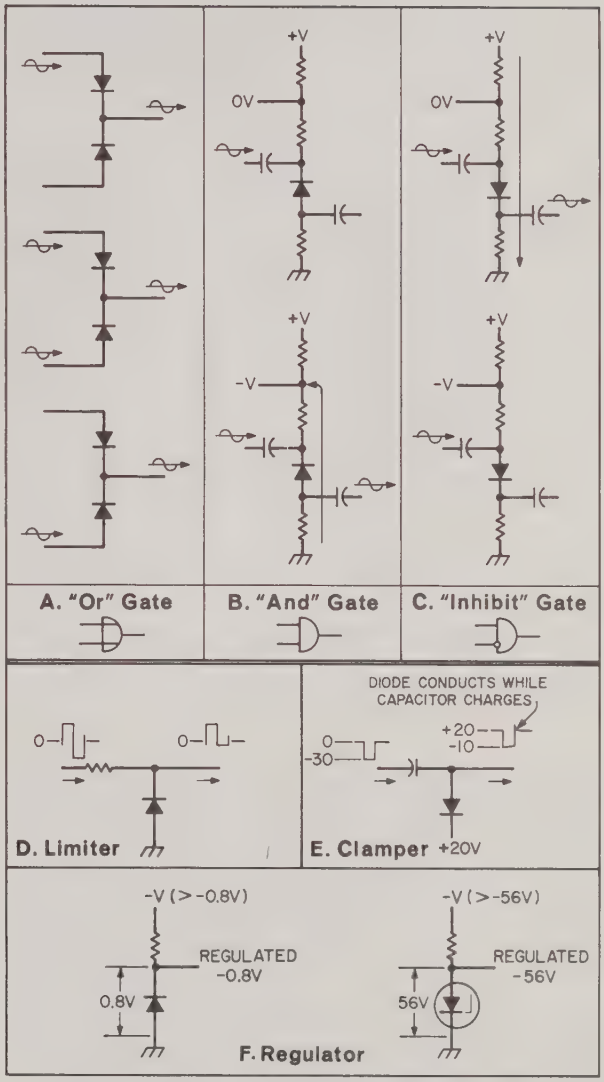

Figure 4-1. Basic Diode Circuits

4-11. THE TRANSISTOR.

4-12. GENERAL. Transistors are used throughout the counter in circuit configurations such as the amplifier, the flip-flop or binary, the trigger circuit, and the one-shot multivibrator. In the following paragraphs, basic transistor operation and a few basic transistor circuits are discussed. These paragraphs discuss the easily observed changes in currents and voltages in transistor circuits which help technicians locate circuit faults but do not attempt to describe how transistors work internally.

4-13. BIASING AND CONDUCTION. Vacuum tubes and transistors are functionally similar. In the tube a small grid-to-cathode voltage controls a larger plate-to-cathode current flow. In a transistor a small base-to-emitter current controls a large collector-to-emitter current. A comparison of basic vacuum tube, NPN transistor, and PNP transistor operation is shown in Figure 4-2A; indicated current represents conventional flow of positive charges external to the transistor and is not intended to indicate flow of carriers inside the transistor structure. Notice that the effect of emitter-base-collector voltages is totally reversed between NPN and PNP transistors; circuits which are arranged for an NPN transistor usually function normally for a PNP transistor if supply voltages are reversed.

4-14. AMPLIFIERS. As with vacuum tubes, three basic amplifier types are available (Figure 4-2B). These amplifiers may be used alone or in combination to form complex circuits.

4-15. FLIP-FLOP. The flip-flop is a bi-stable two-transistor circuit in which one transistor conducts, holding the other cut off. Each input pulse causes a reversal of states; that is, the cut-off transistor is turned on and the conducting transistor is cut off. In the flip-flop shown in Figure 4-3A, Q1 is initially conducting heavily; its collector voltage is only slightly negative; a near-zero voltage is supplied to the base of Q2 (junction of R27-28 divider). The voltage drop across R24 produces a sufficiently negative voltage at the emitter of Q2 to hold Q2 cut off. With Q2 cut off the R18-R19-R20 divider delivers a negative voltage to the base of Q1 to keep it conducting.

4-16. At time t_1 the positive input pulse cuts off Q1; the Q1 collector voltage goes negative and drives Q2 into conduction (R27-R28 divider to Q2 base); the Q2 collector voltage and the Q1 base voltage (R19-R20 divider) then become considerably less negative, permitting Q1 to remain cut off. The R26-R27-R28 divider delivers a sufficiently negative voltage to the base of Q2 to drive it into conduction. In a similar manner the positive input pulse at time t_2 cuts off Q2 and starts a sequence of events which ends with Q1 conducting and Q2 cut off. Note that a positive input pulse has no effect on Q1 if it is already cut off. A negative reset pulse applied to the base of Q1 returns the flip-flop to its initial condition (Q1 conducting, Q2 cutoff). The diode CR9 removes the negative pulse from the differentiated square wave input. Without this diode, the negative pulse would drive Q1 which is cut off and the stage would switch from one state to the other but would not divide by two. The ac coupling through C2 and C3 insures fast switching. The dc coupling through R19 and R27 insures bistable characteristics.

4-17. BINARY CIRCUIT. In this manual a flip-flop which completes its operating cycle and produces an output pulse after receipt of two similar input pulses is called a binary circuit, since it is a counting device in a binary system. The binary circuit can be driven from a single input which is connected either through a pair of resistors or through a pair of gating diodes.

A. Amplifier Characteristics

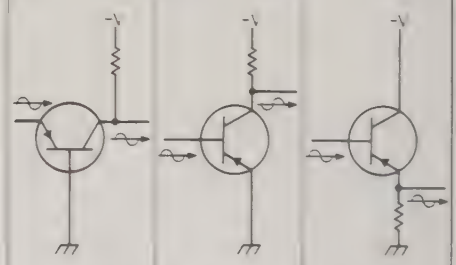

CHARACTERISTIC	COMMON BASE	COMMON EMITTER	COMMON COLLECTOR
Input Impedance	30Ω-50Ω	500Ω-1500Ω	20KΩ-500KΩ
Output Impedance	300KΩ-500KΩ	30KΩ-50KΩ	50Ω-1000Ω
Voltage Gain	500-1500	300-1000	<1
Current Gain	<1	25-50	25-50
Power Gain	20dB-30dB	25dB-40dB	10dB-20dB (Emitter Follower)

B. Transistor Biasing

TYPE	CUTOFF	CONDUCTION
NPN		
PNP		

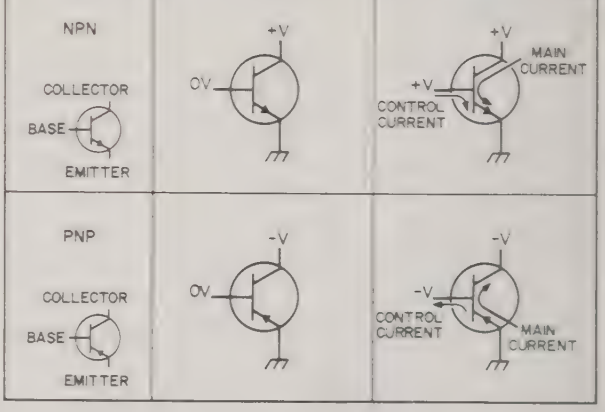

Figure 4-2. Transistor Operation

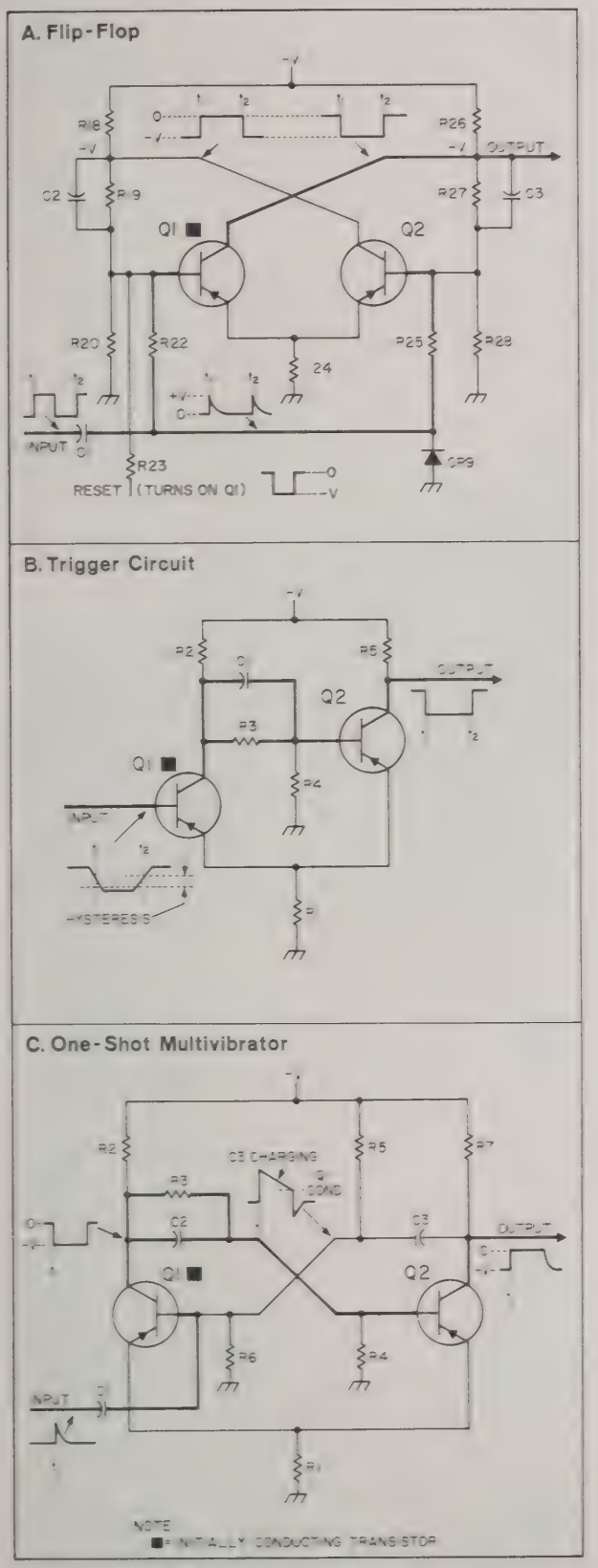

Figure 4-3. Basic Transistor Circuits

4-18. TRIGGER CIRCUIT. The trigger circuit is a limiter or squaring circuit which produces an output waveform with very fast rise and fall times. The trigger circuit in Figure 4-3B is similar to the flip-flop except that the RC network in one half is replaced by the input signal. C1 bypasses R3 to couple fast changes in voltage at Q1 collector to base Q2. Either Q1 or Q2 can conduct depending on the voltage at the input. When the input goes negative it turns Q1 on and Q2 off, which produces a low output. When the input returns positive it turns Q1 off and Q2 on, which produces a high output. When the input signal drives the trigger circuit through its cycle time (time t_1 to time t_2) the trigger points are slightly shifted above the point where the non-conducting transistor would be expected to turn on by the additional voltage required to turn off the conducting transistor. Note that this slight shift in input voltage between switching with a negative-going input (time t_1) and switching with a positive-going input (time t_2) is called the Hysteresis.

4-19. ONE-SHOT MULTIVIBRATOR. The one-shot multivibrator is a circuit which generates a pulse of some specified duration following the application of a suitable triggering pulse. The circuit is similar to the flip-flop except one dc coupling path has been removed so the circuit is stable only in the state with Q1 conducting.

4-20. In the typical one-shot multivibrator shown in Figure 4-3C the following conditions exist during the initial stable period: the R5-R6 divider delivers a sufficiently negative potential to the base of Q1 to hold Q1 in saturation; the Q1 collector and Q1 emitter are therefore slightly negative; the R3-R4 divider delivers the Q2 base an even smaller negative voltage to hold Q2 cut off.

4-21. The positive triggering pulse at time t_1 reduces conduction of Q1; the resulting negative-going voltage at the Q1 collector is applied to the Q2 base through the R3-R4 divider (C2 bypasses R3 to provide coupling for the rapidly changing voltage at the Q1 collector); Q2 begins to conduct; the resulting positive-going change in Q2 collector voltage is coupled through C3 to the Q1 base to further decrease Q1 conduction. The process is regenerative and quickly results in Q1 being cut off and Q2 being saturated.

4-22. Capacitor C3 now charges at a rate mainly determined by the values of R6 and C3 (main charge path: R1-Q2-C3-R5). When the Q1 base voltage becomes sufficiently negative, Q1 begins conduction; the resulting positive-going Q1 collector voltage is coupled to the Q2 base; the Q2 collector voltage goes negative and is coupled through C3 to the Q1 base to further increase Q1 conduction. The process is regenerative and ends with the circuit in its original quiescent state, Q1 saturated and Q2 cut off.

4-23. GENERAL DESCRIPTION.

4-24. The Model 5280A is basically the display and power supply sections of a counting system that is completed when an appropriate plug-in unit is installed in its front-panel compartment. The plug-in provides the two input signals (Channels A and B) and

control signals to the Directional Gates on Assembly A1 telling whether each input signal is to be counted in a positive-going or negative-going direction.

4-25. The feature that sets the Model 5280A apart from other counters is its six Reversible Decimal Counter Assemblies (RDCA), A2-A7. Each of these assemblies has two signal inputs; the signal at one input causes the RDCA to count forward (1, 2, 3. . .); a signal at the other input causes it to count backward (9, 8, 7. . .). Each RDCA has two outputs that drive the next RDCA in the series; the last RDCA output is used to light the OVERFLOW light when the accumulated displayed count becomes greater than 999999. The direction of counting depends on the previously accumulated (displayed) count, including sign, and the nature of the controlling signals from the plug-in to A1. A1 Directional Gates and Zero Crossing Assembly is the main input and overall control assembly for the Model 5280A. Circuits on A1 determine which Sign Display (polarity) light should light, and whether the signal from the plug-in should cause the RDCA's to count forward or backward, connecting the input signal to the appropriate input of the first RDCA, A2. The Main Gate, also located on the A1 Assembly, determines whether input signals will reach the RDCA's to be counted. The Main Gate is controlled by signals from A10 Gate Control Assembly, which operates from signals whose source is either the front-panel GATE CONTROL switch or the rear-panel Start or Stop connectors.

4-26. The dc operating voltages for the Display neons and other counter and plug-in circuits are supplied by Rectifier Assembly A12 and Regulator Assembly A13.

4-27. REVERSIBLE COUNTER CIRCUIT DESCRIPTION.

4-28. GENERAL.

4-29. In the following discussion the Reversible Counter circuits are discussed in order of assembly designations, A1 through A13 (see Figure 8-4, Overall Block Diagram and Table 4-1, Assembly Designations, for overall circuit relationship and assembly designations). To prevent confusion between reference designations of components located on the chassis and components located on an assembly complete reference designations are used in the Reversible Counter circuit description. For example, "R1" refers to a component located on the chassis, while "A1R1" refers to a component located on the Directional Gates and Zero Crossing Assembly A1. Connections to printed circuit assemblies are referred to in an abbreviated form. For example the connection to pin 15 of assembly A1 is A1(15). The Reversible Counter manual is constructed so that the schematic diagrams can be unfolded and used with the circuit description.

4-30. DIRECTIONAL GATES AND ZERO CROSSING ASSEMBLY A1.

(Logic Diagram Figure 4-4)
(Circuit Diagram: Figure 8-5)

4.31. GENERAL.

4-32. The Model 5280A is a totalizer whose output display is a function of number of counts, direction of counting, and starting point of counting. The Directional Gates and Zero Crossing Assembly A1 is the "traffic cop" of the Model 5280A, directing signals from the plug-in to the Reversible Decimal Counter Assemblies. All data input and control signals from the plug-in come to this assembly. The Main Gate, also located on this board, is controlled by a signal from Gate Control Assembly A10 (Paragraphs 4-70 through 4-93).

Table 4-1. Assembly Designations

A1	Directional Gates and Zero Crossing
A2	Reversible Decimal Counter Assembly (units)
A3	Reversible Decimal Counter Assembly (tens)
A4	Reversible Decimal Counter Assembly (hundreds)
A5	Reversible Decimal Counter Assembly (thousands)
A6	Reversible Decimal Counter Assembly (ten thousands)
A7	Reversible Decimal Counter Assembly (hundred thousands)
A8	Special Order Reversible Decimal Counter Assembly
A9	Special Order Reversible Decimal Counter Assembly
A10	Gate Control Assembly
A11	Gate Control Amplifier Assembly
A12	Rectifier Assembly } Power Supply
A13	Regulator Assembly } Power Supply

4-33. RULES.

4-34. Knowledge of the following rules will make it easier to understand operation of Assembly A1.

a. INCREASE MAGNITUDE: count in a direction away from zero.

b. DECREASE MAGNITUDE: count in a direction toward zero.

c. SIGN DISPLAY: "+" or "-", indicating direction of accumulated (displayed) count.

d. ZERO: display of 000000, with either "+" or "-" Sign Display, and OVERFLOW light off.

4-35. DIRECTIONAL GATES.

4-36. Directional Gate diodes A1CR5 and A1CR6 are an "OR" gate (G5) which can connect the A and/or B input (depending on operating MODE selected by Plug-in controls) to the Positive Direction One-shot when the Main Gate (G7 and G8) (Paragraph 4-39) is open. Diodes A1CR7 and A1CR8 (G-6) perform a similar function for the Negative Direction One-shot. Diodes A1CR1-A1CR4 allow coupling capacitors A1C2, A1C4, A1C5, and A1C6 (Gates G1-G4) to charge rapidly to -15 volts when the appropriate gate is opened; this allows the gating of fast-rising pulses in the A QUAD B and A(f)B MODES. Resistors A1R1, A1R3, A1R5, and A1R7 across these diodes limit their effective

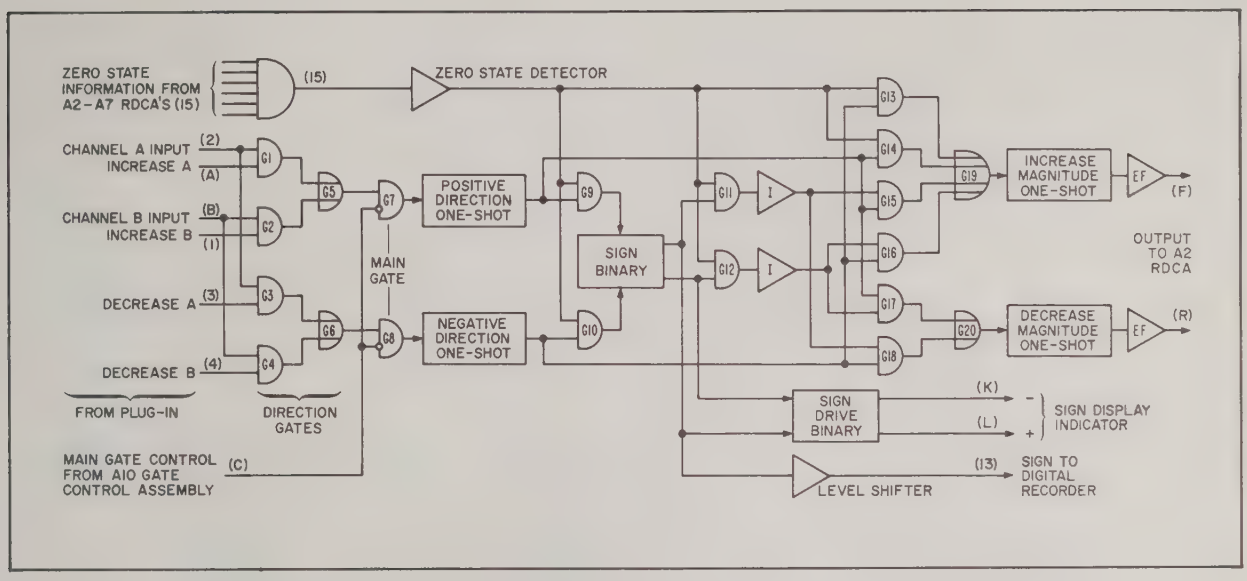

Figure 4-4. A1 Directional Gates and Zero Crossing Logic Diagram

reverse-biased resistance to 4.3K ohms, allowing the capacitors to discharge when the gate is closed.

4-37. When -15 volts is applied by the Plug-in to a Directional Gate control line, A1(A), A1(1), A1(4), or A1(3), two diodes in the Directional Gate are forward-biased, and any input signal is connected to the Main Gate. For example, when there is a signal at A input, A1(2), and -15 volts is applied at A1(A), CR1 (G1) conducts, charging A1C2 to -15 volts, A1CR5 (G5) conducts, and the A input signal is conducted to the Main Gate (G7).

4-38. Note that there are two Directional Gate outputs, one driving the Positive Direction One-shot and one driving the Negative Direction One-shot. Either of these outputs may have a signal that originated as A input, B input, or both inputs.

4-39. MAIN GATE.

4-40. The Main Gate determines whether signals from the Directional Gate outputs will reach the inputs of the Positive Direction and/or Negative Direction One-shot, as they must in order to be counted. The gate is a shunt-type gate; when its diodes are forward-biased, signals from the Directional Gates are shunted to ground through diodes A1CR11 (G7) and A1CR12 (G8) and the -15 volt power supply. Reverse-biasing the Main Gate diodes open-circuits the signal-to-ground paths, allowing the Directional Gate output signals to reach the appropriate One-shot.

4-41. REMAINING A1 CIRCUITRY.

4-42. One-shots are described in Paragraphs 4-19 through 4-22; binaries are described in Paragraphs 4-15 through 4-17. The Zero State Detector A1Q5 and Level Shifter A1Q16 are common-emitter configuration transistor amplifiers.

4-43. SIGN DRIVE BINARY.

4-44. Sign Drive Binary transistors A1Q8 and A1Q9 act as switches controlling conduction of the "+" and "-" Sign Display lights. The conduction of these transistors is controlled by Sign Binary transistors A1Q6 and A1Q7. For a "+" Sign Display, Sign Binary transistor is turned off and Sign Drive Binary transistor A1Q8 is saturated, while A1Q9 is off, so "+" -cathode-anode voltage of DS3 is sufficient to allow the light to light, while the "-"-cathode-anode voltage is zero. Conditions are reversed when a "-" Sign Display is required.

4-45. APPLYING THE RULES: WHAT A1 DOES.

4-46. GENERAL. The rules stated in Paragraph 4-33 are applied by A1 as follows:

a. The count that changes the display from 000000 to 000001 represents an increase in magnitude. After this first count, rule b or c below applies, depending on Sign Display.

b. When the Sign Display is "+", positive direction means the same as "increase magnitude" and negative direction means the same as "decrease magnitude."

c. When the Sign Display is "-", positive direction means the same as "decrease magnitude" and negative direction means the same as "increase magnitude."

4-47. DISPLAY IS ALL ZEROS, EITHER POLARITY SIGN DISPLAY. Each of the RDCA's (A2 through A7) contains a transistor-and-diode circuit (A2-A7Q13 and A2-A7CR42) that is one input to a 6-input "AND" gate. The AND gate requires a positive voltage at all inputs to have a positive output; and there is a positive input from a RDCA only when its display is "0" (see Paragraph 4-56). The AND gate output is the input

to the Zero State Detector, A1Q5; and when this signal is positive, A1Q5 conducts, forward-biasing Sign Binary gate diodes A1CR13 (G9) and A1CR14 (G10). (Note that when the RDCA display is not all zeros, diodes A1CR13 (G9) and A1CR14 (G10) will be reverse-biased.) Zero State Detector A1Q5, when conducting, also turns off the Upper and Lower Gate Drive Amplifiers A1Q10 and A1Q11, reverse-biasing diodes A1CR23-A1CR26 (G15-G18), and forward-biases diodes A1CR21 and A1CR22 (G13 and G14).

4-48. An output from the Positive Direction One-shot will be connected through A1CR13 (G9) to A1Q6 base, turning off that transistor and lighting the "+" Sign Display light. The One-shot output through A1CR22 (G14) will drive the Increase Magnitude One-shot, producing an output which will change the A2 display from "0" to "1". When the A2 display is no longer "0", the Zero Digit AND Gate output will be negative, and Zero State Detector A1Q5 will turn off. When A1Q5 turns off, A1CR21 (G13) and A1CR22 (G14) will be reverse-biased, A1CR13 (G9) and A1CR14 (G10) will be reverse-biased, the Upper Gate Drive Amplifier will turn on, forward-biasing A1CR23 (G15) and A1CR26(G18): these are the conditions for any counting during a "+" Sign Display (Paragraph 4-50).

4-49. When the display is all zeros and the circuit conditions are those of Paragraph 4-47, an output from the Negative Direction One-shot will be connected through A1CR14 (G10) to A1Q7 base, turning off that transistor and lighting the "-" Sign Display light. The One-shot output, through A1CR21 (G13) will drive the Increase Magnitude One-shot, producing an output which will change the A2 display from "0" to "1". (Remember that any change in count away from zero is an increase in magnitude.) When the A2 display is no longer "0", the Zero Digit AND Gate output will be negative, and Zero State Detector A1Q5 will turn off. When A1Q5 turns off, A1CR21 (G13) and A1CR22 (G14) will be reverse-biased, A1CR13 (G9) and A1CR14 (G10) will be reverse-biased, the Lower Gate Drive Amplifier will turn on, forward-biasing A1CR24 (G16) and A1CR25 (G17); these are the conditions for any counting when the Sign Display is "-" (Paragraph 4-51).

4-50. "+" SIGN DISPLAY. When the Sign Display is "-", and the RDCA display is not zero, the output of the Positive Direction One-shot drives the Increase Magnitude One-shot through A1CR23 (G15), and the output of the Negative Direction One-shot drives the Decrease Magnitude One-shot through A1CR26 (G18), both diodes forward-biased by the Upper Gate Drive Amplifier being turned "on."

4-51. "-" SIGN DISPLAY. When the Sign Display is "-", and the RDCA display is not zero, the output of the Positive Direction One-shot drives the Decrease Magnitude One-shot through A1CR25 (G17), and the output of the Negative Direction One-shot drives the Increase Magnitude One-shot through A1CR24 (G16), both diodes forward-biased by the Lower Gate Drive Amplifier being turned "on."

4-52. A2 THROUGH A7 REVERSIBLE DECIMAL COUNTER ASSEMBLY (RDCA).

(Logic Diagram, Figure 4-5)
(Circuit Diagram, Figure 8-6)

4-53. GENERAL.

4-54. The function of the Reversible Decimal Counter Assembly (RDCA) is to count and display the difference between the increase and decrease input signals. Each RDCA also provides separate "carry" and "borrow" pulses to the next RDCA. The distinguishing feature of the RDCA is that it counts in either of two defined sequences. Table 4-2 shows the truth table for both increase and decrease counting sequences.

Table 4-2. Truth Table for Increase and Decrease Counting Sequences

Increase					Decrease				
Decimal Count	A	B	C	D	Decimal Count	A	B	C	D
0	0	0	0	0	0	0	0	0	0
1	1	0	0	0	9	1	0	0	1
2	0	1	0	0	8	0	0	0	1
3	1	1	0	0	7	1	0	1	1
4	0	1	1	0	6	0	0	1	1
5	1	1	1	0	5	1	1	1	0
6	0	0	1	1	4	0	1	1	0
7	1	0	1	1	3	1	1	0	0
8	0	0	0	1	2	0	1	0	0
9	1	0	0	1	1	1	0	0	0

4-55. CIRCUIT CONFIGURATION.

4-56. The RDCA consist of: four flip-flops interconnected to have ten allowable states; input increase and decrease one shot multivibrators; output increase and decrease one-shot multivibrators; digital display and decoding circuitry; binary coded decimal (BCD) decoding circuitry; and a zero state detecting "AND" gate. The counting section of the RDCA is divided into two sections: the input section consisting of binary A and associated gates (G1, G2, and G3); and the Quinary section consisting of binaries B, C, and D and their associated input gates (G4 through G15). Binary A determines whether the number stored in the RDCA is odd or even and whether an increase or decrease pulse, or no pulse is applied to the quinary section. Binary A controls the input pulses to the quinary through gates G1 and G3 and the increase and decrease one-shot multivibrators. The increase one-shot passes pulses only when binary A is in its "1" state, with transistor A conducting. With binary A in its "1" state the RDCA is in its odd numbered state. The decrease one-shot passes pulses only when binary A is in its "0" state, with transistor A conducting. This is the RDCA's even numbered state. The "AND" gates in the quinary section steer the increase or decrease one-shot pulses to the correct binary so that the RDCA increases or decreases by one count. The RDCA has increase and decrease output circuits to provide input signals to the next RDCA. The out increase one-shot produces an increase carry pulse when the RDCA increases from 9 to 0. The out decrease one-shot pro-

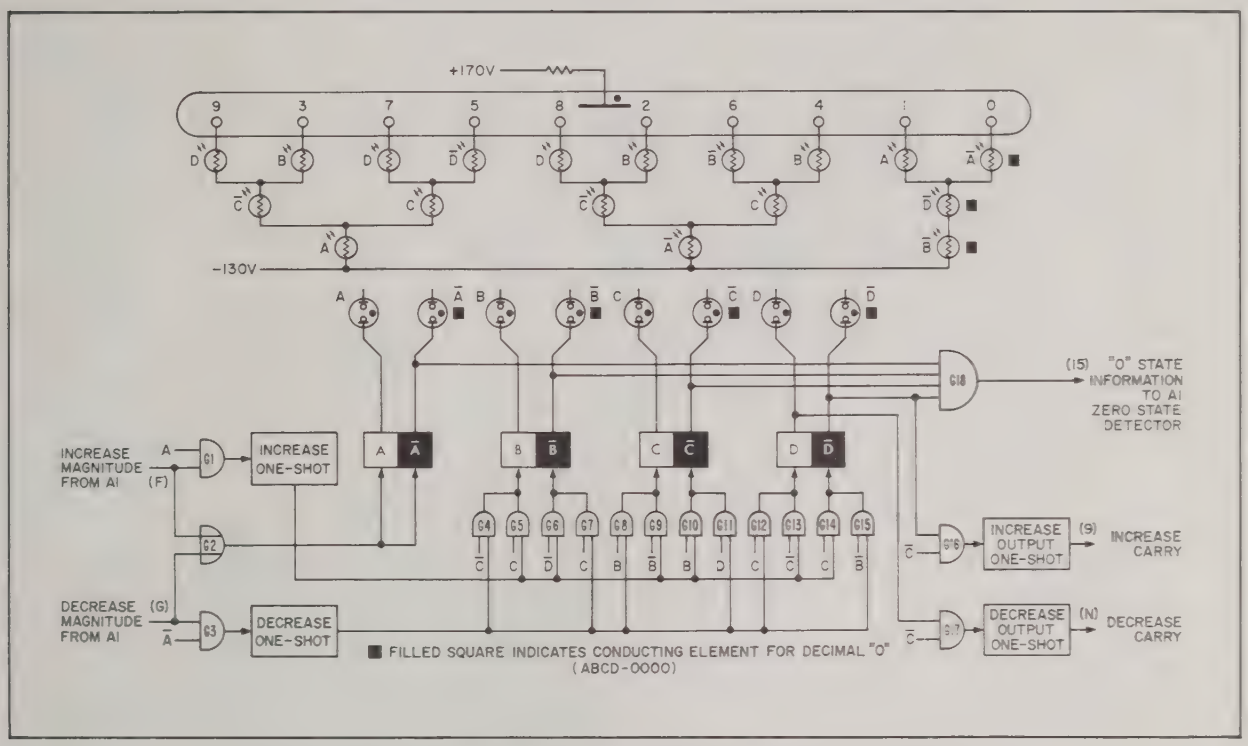

Figure 4-5. Reversible Decimal Counter Assembly Logic Diagram

duces a decrease carry pulse when the RDCA decreases from 0 to 9. The RDCA zero count state is detected by "AND" gate G18 providing "0" state information to A1 Directional Gate and Zero Crossing Assembly. The outputs from the RDCA "0" state "AND" gates are combined to form a zero digit "AND" gate. The zero digit and gate senses when all RDCA's are at their "0" state and provides this information to the "0" state detector in A1 Directional Gates and Zero Crossing Assembly.

4-57. INCREASE COUNTING SEQUENCE.

4-58. Figure 4-6 shows the increase counting sequence for the RDCA. Initially each binary is in the reset state (ABCD = 0000) with transistors $\overline{A}$, $\overline{B}$, $\overline{C}$, and $\overline{D}$ conducting. Figure 4-6 (Increase Counting Sequence) shows that binary A changes state for each increase input pulse and that binaries B, C, and D change state only when A binary is in the "1" state (transistor A conducting). When A binary is in the "1" state transistor A enables the "AND" gate G1 in the input to the increase one-shot. The following action takes place when a series of increase pulses are applied to the RDCA increase input. For circuit details and increase counting sequence waveforms see Schematic Diagram, Figure 8-6.

a. The first increase pulse switches binary A to the "1" state. ABCD = 1000). The negative A output enables the increase one-shot "AND" gate (G1).

b. With G1 enabled the second increase pulse fires the increase one-shot. The resulting negative pulse is "AND" gated by G6 to binary B, switching it to its "1" state. The G6 "AND" gate enable signal is provided by $\overline{D}$. This second pulse also returns binary A to its "0" state (ABCD = 0100).

c. The third pulse switches binary A to the "1" state, which again enables the "AND" gate G1 to the increase one-shot (ABCD = 1100).

d. With G1 again enabled the fourth increase pulse fires the increase one-shot. The resulting negative pulse is "AND" gated by G10 to binary C, switching it to its "1" state. The G10 "AND" gate enable signal is provided by B. This fourth pulse also returns binary A to its "0" state (ABCD = 0110).

e. The fifth pulse switches binary A to the "1" state which again enables the "AND" gate G1 to the increase one-shot (ABCD = 1110).

f. With G1 again enabled the sixth increase pulse fires the increase one-shot. The resulting negative pulse is "AND" gated by G5 to binary B switching it to its "0" state. The one-shot negative pulse is also "AND" gated by G14 to binary D switching it to its "1" state. Both "AND" gates, G5 and G14, are enabled by C. This sixth pulse also returns binary A to its "0" state (ABCD = 0011).

g. The seventh pulse switches binary A to the "1" state, which again enables the "AND" gate G1 to the increase one-shot (ABCD = 1011).

h. With G1 again enabled the eighth increase pulse fires the increase one-shot. The resulting negative pulse is "AND" gated by G9 to binary C, switching it to its "0" state. The G9 "AND" gate enable signal is provided by B. This eighth pulse also returns binary A to its "0" state (ABCD = 0001).

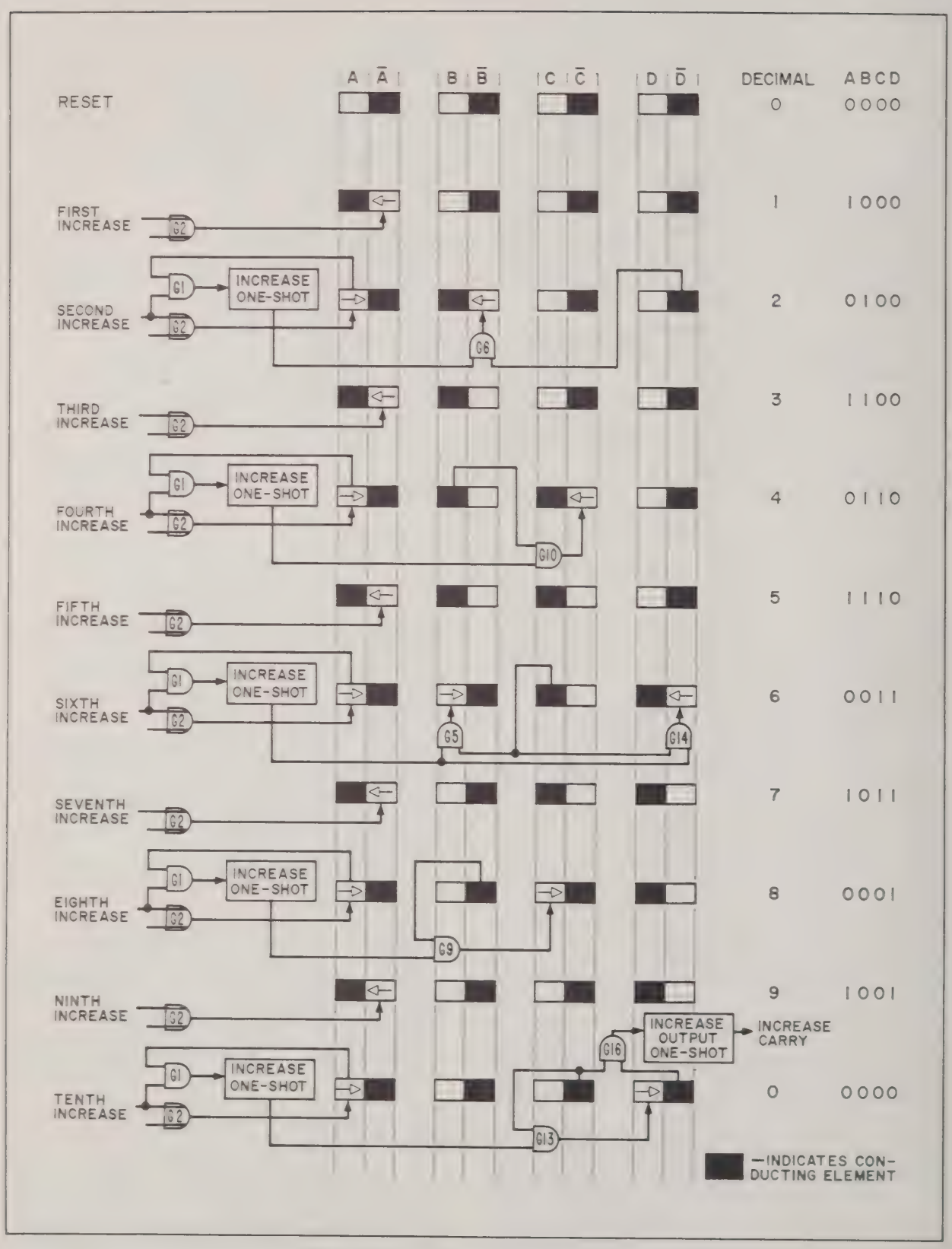

Figure 4-6. Increase Counting Sequence

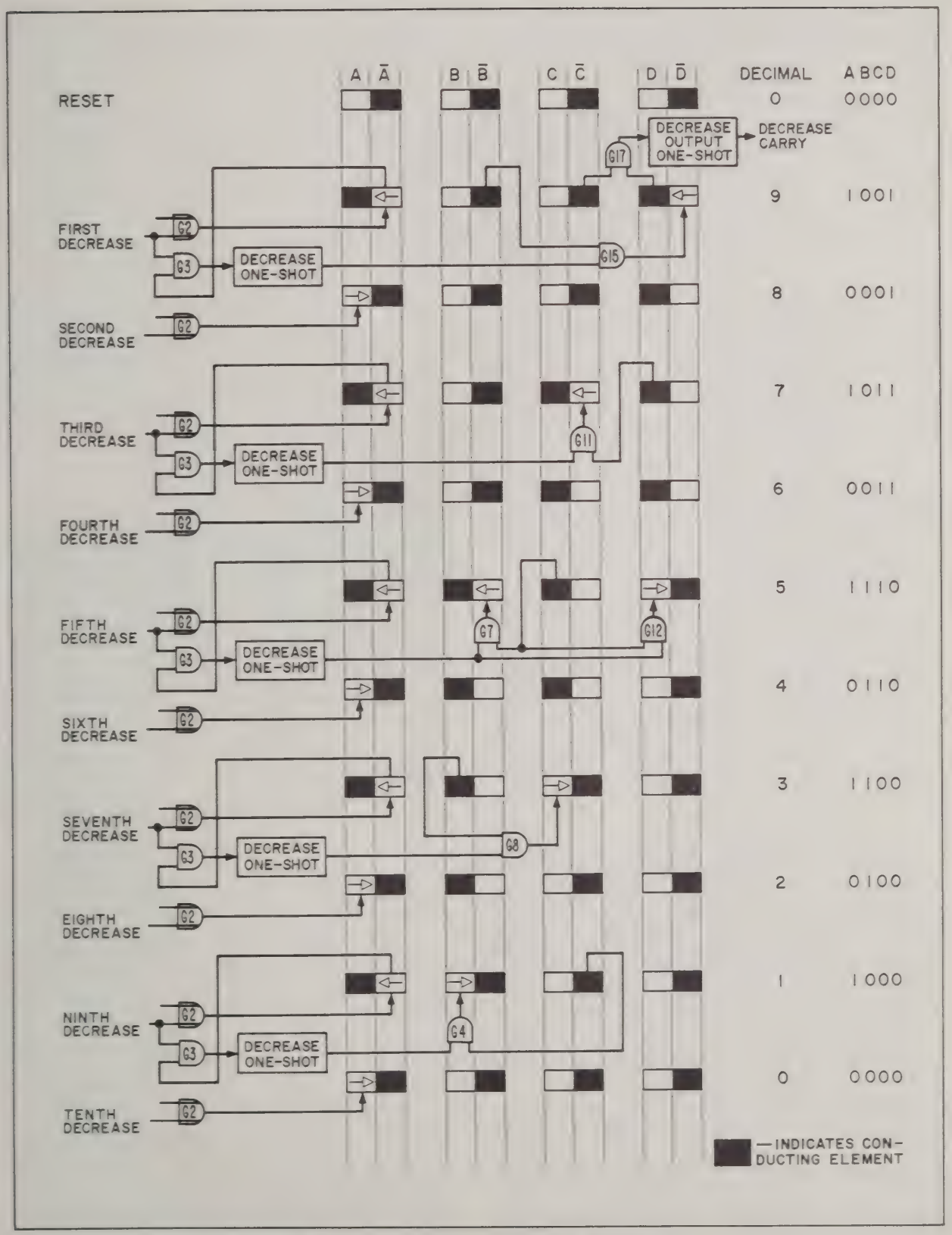

Figure 4-7. Decrease Counting Sequence

i. The ninth pulse switches binary A to the "1" state, which again enables the "AND" gate G1 to the one-shot (ABCD = 1001).

j. With G1 again enabled the tenth pulse fires the increase one-shot. The resulting negative pulse is "AND" gated by G13 to binary D switching it to its "0" state. The G13 "AND" gate enable signal is provided by $\overline{C}$. This tenth pulse also returns binary A to its "0" state (ABCD = 0000). The transition of binary D from the "1" state to the "0" state is AND gated by G16 to the increase output one-shot, which provides an increase carry pulse to the next RDCA. The G16 "AND" gate enable signal is provided by $\overline{C}$.

4-59. DECREASE COUNTING SEQUENCE.

4-60. Figure 4-7 shows the decrease counting sequence for the RDCA. In this example each binary is initially in its reset state (ABCD = 0000) with transistors $\overline{A}$, $\overline{B}$, $\overline{C}$, and $\overline{D}$ conducting. Figure 4-7 (Decrease Counting Sequence) shows that binary A changes state for each decrease input pulse and that binaries B, C, and D change state only when A binary is in the "0" state ($\overline{A}$ transistor conducting). When A binary is in the zero state $\overline{A}$ transistor enables the "AND" gate G3 in the input to the decrease one-shot. The following action takes place when a series of decrease pulses are applied to the RDCA decrease input. For circuit details and decrease counting sequence waveforms see Schematic Diagram Figure 8-6.

a. With "AND" gate G3 enabled by $\overline{A}$, the first decrease pulse fires the decrease one-shot. The resulting negative pulse is "AND" gated by G15 to binary D, switching it to its "1" state. The G15 "AND" gate enable signal is provided by $\overline{B}$. The first pulse also switches binary A to its "1" state (ABCD = 1001). The transition of binary D from the "0" state to the "1" state is "AND" gated by G17 to the decrease output oneshot, which provides a decrease carry pulse to the next RDCA. The G17 "AND" gate enable signal is provided by $\overline{C}$.

b. The second decrease pulse switches binary A back to its "0" state, which again enables the "AND" gate G3 to the decrease one-shot (ABCD = 0001).

c. With G3 again enabled the third decrease pulse fires the decrease one-shot. The resulting negative pulse is "AND" gated by G11 to binary C switching it to its "1" state. The G11 "AND" gate enable signal is provided by D. This third pulse also switches binary A to its "1" state (ABCD = 1011).

d. The fourth decrease pulse switches binary A back to its "0" state, which again enables the "AND" gate G3 to the decrease one-shot (ABCD = 0011).

e. With G3 again enabled the fifth decrease pulse fires the decrease one-shot. The resulting negative pulse is "AND" gated by G7 to binary B switching it to its "1" state. The one-shot negative pulse is also "AND" gated by G12 to binary D switching it to its "0" state. Both "AND" gates G7 and G12 are enabled by C. This fifth pulse also switches binary A to its "1" state (ABCD = 1110).

f. The sixth decrease pulse switches binary A back to its "0" state, which again enables the "AND" gate G3 to the decrease one-shot (ABCD = 0110).

g. With G3 again enabled the seventh decrease pulse fires the decrease one-shot. The resulting negative pulse is "AND" gated by G8 to binary C switching it to its "0" state. The G8 "AND" gate enable signal is provided by B. The seventh pulse also switches binary A to its "1" state (ABCD = 1100).

h. The eighth decrease pulse switches binary A back to its "0" state, which again enables the "AND" gate G3 to the decrease one-shot ABCD = 0100).

i. With G3 again enabled the ninth decrease pulse fires the decrease one-shot. The resulting negative pulse is "AND" gated by G4 to binary B switching it to its "0" state. The G4 "AND" gate enable signal is provided by $\overline{C}$. The ninth pulse also switches binary A to its "1" state (ABCD = 1000).

j. The tenth decrease pulse switches binary A back to its "0" state (ABCD = 0000).

4-61. RESETTING TO ZERO.

4-62. The positive reset pulse is applied to the base of the "0" state transistors ($\overline{A}$, $\overline{B}$, $\overline{C}$, $\overline{D}$) in each binary. If the "0" state transistor is conducting, the positive pulse has no effect; if the "0" state transistor is not conducting the pulse turns it on. Thus the reset pulse ensures that all four "0" state transistors are conducting. Figure 4-8 shows a reversible decimal counter assembly receiving a reset pulse. The RDCA is in the decimal count of "5" state (ABCD = 1110) and the reset pulse returns the RDCA to the decimal "0" state (ABCD = 0000). Note the difference between a regular input pulse and a reset pulse: a regular input pulse is negative, and causes conducting transistor to cut off; the reset pulse is positive and causes a cut-off transistor to conduct.

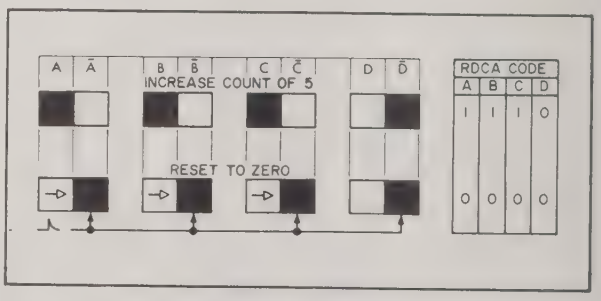

Figure 4-8. Typical Reset Operation of Reversible Decimal Counter Assembly

4-63. ELECTRICAL READOUT.

4-64. A four-line binary coded decimal (BCD) output is available from each Reversible Decimal Counter Assembly. Each RDCA provides 1-2-4-8 "1" state positive BCD information to the Digital Recorder output on the Counter rear panel. In a conventional binary counter the BCD notation of the output is weighted either "1" or "0" and the weights are assigned directly

to the four binaries. Because of the unusual counting sequence of the Reversible Decimal Counter Assemblies a decoding network is required to derive the +1-2-4-8 BCD code; see Figure 4-9. The output from the decoding network is a conventional "1" state positive 1-2-4-8 BCD code (see Table 4-3). A decimal 0 is represented by a relatively negative voltage on each line (Dp, Cp, Bp and Ap): the BCD notation is stated so that the decimals can be written with the least significant digit to the right. Thus the BCD notation used in the Model 5280A is given Dp = 8, Cp = 4, Bp = 2, Ap = 1.

4-65. BCD DECODING SEQUENCE.

4-66. Figure 4-6, Increase Counting Sequence, and Figure 4-9, BCD Decoding Network and the following steps will describe the BCD decoding operation for decimal numbers 1 through 0. It must be remembered that for the BCD output we are using positive logic and that the RDCA counting logic is negative. Therefore we will be dealing with the nonconducting transistors in order to obtain our required positive levels. When the NPN transistors are conducting, the collector is negative; when nonconducting, the collector is positive.

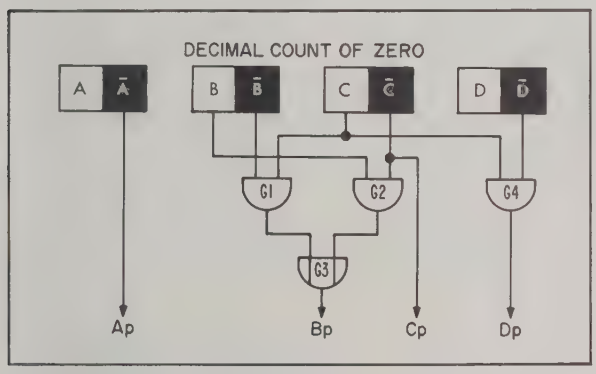

Figure 4-9. Binary Coded Decimal Decoding Network

a. Decimal Count of 1, BCD = 0001. Binary A has switched to its "1" state, $\bar{A}$ transistor is nonconducting, providing a "1" state positive BCD level on the Ap line.

b. Decimal Count of 2, BCD = 0010. Binary A has returned to its "0" state, $\bar{A}$ transistor is conducting, providing a "0" state negative BCD level on the Ap line. Binary B has switched to the "1" state, $\bar{B}$ transistor is nonconducting, providing a positive level to "AND" gate G1. Nonconducting C transistor provides the other positive level to "AND" gate G1. The resulting positive G1 output is "OR" gated by G3 to provide a "1" state positive BCD level on the Bp line.

c. Decimal Count of 3, BCD = 0011. Binary A has switched to its "1" state, $\bar{A}$ transistor is nonconducting, providing a "1" state positive BCD level on the Ap line.

d. Decimal Count of 4, BCD = 0100. Binary A has returned to its "0" state, $\bar{A}$ conducting, providing a "0" state negative BCD level on the Ap line. Binary C has switched to its "1" state, $\bar{C}$ is nonconducting, providing a "1" state positive BCD level on the Cp line. With C transistor conducting, "AND" gate G1 is no longer enabled, resulting in a "0" state negative BCD level on the Bp line.

Table 4-3. BCD Output Truth Table

BCD Outputs Reversible Decade + Truth Logic 1-2-4-8 "1" State Positive				
Decimal Readout	8 Dp	4 Cp	2 Bp	1 Ap
0	0	0	0	0
1	0	0	0	1
2	0	0	1	0
3	0	0	1	1
4	0	1	0	0
5	0	1	0	1
6	0	1	1	0
7	0	1	1	1
8	1	0	0	0
9	1	0	0	1

e. Decimal count of 5, BCD = 0101. Binary A has switched to its "1" state, $\bar{A}$ transistor is nonconducting, providing a "1" state positive BCD level on the Ap line.

f. Decimal count of 6, BCD = 0110. Binary A has returned to its "0" state, $\bar{A}$ conducting, thus providing a "0" state negative BCD level on the Ap line. Binary B has switched to its "0" state, the B transistor is nonconducting, thus providing a positive level to "AND" gate G2. Nonconducting $\bar{C}$ transistor provides the other positive level to "AND" gate G2. The resulting positive G2 output is "OR" gated by G3 to provide a "1" state positive BCD level on the Bp line.

g. Decimal Count of 7, BCD = 0111. Binary A has switched to its "1" state, $\bar{A}$ transistor is nonconducting, providing a "1" state positive BCD level on the Ap line.

h. Decimal Count of 8, BCD = 1000. Binary A has returned to its "0" state, the $\bar{A}$ transistor is conducting, thus providing a "0" state negative BCD level on the Ap line. Binary C has switched to its "0" state, the $\bar{C}$ is conducting thus providing a "0" state negative BCD level on the Cp line. With $\bar{C}$ transistor conducting "AND" gate G2 is no longer enabled resulting in a "0" state negative BCD level on the Bp line. The nonconducting C transistor provides a positive level to "AND" gate G4. Nonconducting $\bar{D}$ transistor provides the other positive level to "AND" gate G4. The resulting positive G4 output is the "1" state positive BCD output on the Dp line.

i. Decimal Count of 9 BCD = 1001. Binary A has switched to its "1" state, the $\bar{A}$ transistor is nonconducting, thus providing a "1" state positive BCD level on the Ap line.

j. Decimal Count of 0 BCD = 0000. Binary A has returned to its "0" state, the $\bar{A}$ transistor is conducting thus providing a "0" state negative BCD level on the Ap line. Binary D has switched to its 0, with $\bar{D}$

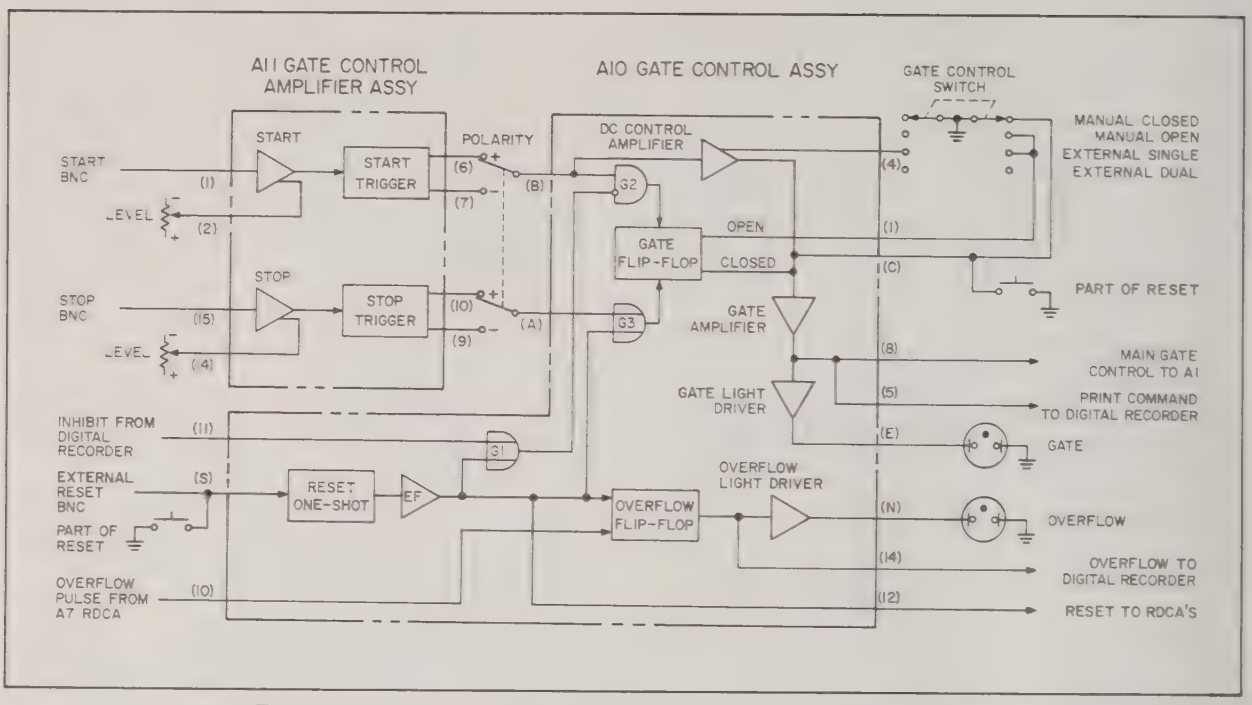

Figure 4-10. Gate Control Amplifier and Gate Control Logic Diagram

transistor conducting, "AND" gate G4 is no longer enabled resulting in a "0" state negative BCD level on the Dp line.

4-67. DIGITAL DISPLAY.

4-68. A display matrix, consisting of eight neon input lamps and 18 photoconductive elements is used to convert the Reversible Decimal Counter Assembly code to a digital representation. The display matrix is shown in Figure 4-5, RDCA logic diagram and Figure 8-6, RDCA schematic diagram.

4-69. As indicated in schematic diagram Figure 8-6, the circuit to each numeral in the display is brought through three series-connected photocell elements. A characteristic of the photocell element is that it is a high resistance element (several megohms) when dark and a relatively low resistance element (less than 7000 ohms) when illuminated. Thus when the three photocell elements which constitute a circuit path are illuminated, the resistance drops to about 20,000 ohms and sufficient current can flow to light the display digit. The photocells are illuminated by neon lamps which are connected in the collector circuit of each of the transistors in the binaries. The neon lamps light when the transistor they are connected to is conducting. The Reversible Decimal Counter Assemblies have ten counting states, the combinations of conducting and non-conducting transistors required to light a lamp pattern for any decimal digit can be determined by using the increase and decrease counting sequences, Figures 4-6 and 4-7, and the RDCA Logic Diagram, Figure 4-5. For example for a decimal digit 5 it can be seen on either counting sequence diagram, Figure 4-5 or Figure 4-6, that transistors ABC and $\overline{D}$ are conducting. The lamps associated with these transistors illuminate the photocell elements in the circuit to the digit 5 display; see Figure 4-5, RDCA Logic Diagram.

4-70. GATE CONTROL ASSEMBLY A10.

Logic diagram, Figure 4-10;
Circuit diagram, Figure 8-7

4-71. GENERAL.

4-72. The Gate Control Assembly uses signals from Gate Control Amplifier Assembly A11, front-panel GATE CONTROL switch S2; and Reset signals to open and close the Main Gate located on Directional Gates and Zero Crossing Assembly A1 (Paragraph 4-39). The Gate Control Assembly also controls front-panel GATE and OVERFLOW lights, and provides the signal that resets the RDCA's to zero.

4-73. GATE AMPLIFIER.

4-74. GENERAL. Gate Amplifier A10Q11 controls conduction of Main Gate Diodes A1CR9-A1CR12 (A1G7 and A1G8, Figure 8-8). When A10Q11 is conducting, the diodes are conducting, and the Main Gate is closed, shunting signals from the Directional Gates to ground. When A10Q11 is "off", the Main Gate diodes are not conducting, so the Main Gate is open, passing signals from the Directional Gates to the Positive Direction and Negative Direction One-shots.

4-75. Conduction of the Gate Amplifier is controlled by the front-panel GATE CONTROL switch in MANUAL CLOSED and MANUAL OPEN modes, by DC Control Amplifier A10Q1 in EXTERNAL SINGLE mode, or by Gate flip-flop A10Q6-A10Q7 in EXTERNAL DUAL mode.

4-76. GATE LIGHT DRIVER.

4-77. The Gate Amplifier controls the front-panel GATE light through Gate Light Driver A10Q12, which is connected in parallel with the GATE light. To close the Main Gate, A10Q11 is saturated and its emitter voltage is ground. The Gate Light Driver is forward-biased, reducing the voltage across the GATE light below that required for its conduction, so the light is extinguished. When A10Q11 is not conducting, and the Main Gate is open, the negative voltage at A10Q11 emitter is coupled through A10CR10 to A10Q12 base, turning off A10Q12, and allowing the voltage across DS1 to rise to the ionization voltage, and the GATE light lights.

4-78. GATE CONTROL.

4-79. GENERAL. The front-panel GATE CONTROL switch is a single-wafer (with connections front and rear), five-position rotary switch. Four of the five switch positions are labelled on the Counter front panel: MANUAL CLOSED, MANUAL OPEN, EXTERNAL SINGLE, and EXTERNAL DUAL; the middle position, not marked on the front panel, is wired as a second MANUAL CLOSED position.

4-80. IN MANUAL CLOSED or MANUAL OPEN, conduction of Gate Amplifier A10Q11 (Paragraph 4-74), controlling the Main Gate, is determined only by the GATE CONTROL switch. In EXTERNAL SINGLE, A10Q11 conduction is controlled by DC Control Amplifier A10Q1, and the Main Gate control is made to be dc coupled; the opening and closing of the Main Gate being dependent on: 1) relative polarity of a dc voltage at the rear-panel Start connector and the voltage selected by the Start Level control R1; and 2) the setting of Polarity switch S3. In EXTERNAL DUAL, A10Q11 conduction is controlled by A10Q6 in the Gate Flip-flop, A10Q6-A10Q7, and the Main Gate control is ac coupled; the opening and closing of the Main Gate requiring Start and Stop input signals at the rear-panel connectors that cross their respective trigger levels (set by R1 and R2) in the direction selected by Polarity switch S3.

4-81. MANUAL CLOSED. In this switch position, A10Q11 base is connected to ground through the GATE CONTROL switch, turning A10Q11 on and closing the Main Gate.

4-82. MANUAL OPEN. When the GATE CONTROL switch is set to this position, the voltage at A10R7-R15 junction is made to go more positive (from -13.9 volts to ground), assuring reverse-biasing of A10Q6 and interruption of A10Q11 base current, opening the Main Gate as described in Paragraph 4-74.

4-83. EXTERNAL SINGLE. When the GATE CONTROL switch is set to this position, A10Q1 emitter circuit, normally open, is connected to ground, completing the circuit. At the same time the A10R7-R15 junction is connected to ground, as in MANUAL OPEN (Paragraph 4-82), allowing only A10Q1 to control A10Q11 base current and the opening and closing of the Main Gate.

4-84. When A10Q1 is turned "on" by a base voltage level more negative than ground, it conducts A10Q11 base current, closing the Main Gate as described in Paragraph 4-74. When A10Q1 is turned "off" by a positive voltage at its base, A10Q11 base current is interrupted, turning off that transistor and the Main Gate diodes, opening the Main Gate. In EXTERNAL SINGLE operation, the polarity switch selects the relative polarity between a voltage applied at the START connector and Start Level setting that will open the Main Gate (Paragraph 4-102).

4-85. EXTERNAL DUAL. When the GATE CONTROL switch is set to EXTERNAL DUAL, separate Start and Stop signals are required to control the Main Gate. Conduction of A10Q11 is controlled by A10Q6 in the Gate Flip-flop. The Main Gate is opened when A10Q6 is turned "off" by a positive pulse at its base, and closed when a positive pulse is applied to A10Q7 base, turning "on" A10Q6 by flip-flop action.

4-86. OVERFLOW.

4-87. GENERAL. The largest possible displayed count for standard Model 5280A's is 999999. The next count causes the display to change to 000000. To make an operator aware that the count has exceeded the maximum that the RDCA's can display, the output signal that occurs when the last RDCA (A7) changes its count from "9" to "10" (Paragraph 4-56) is used to light the OVERFLOW light and provide an electrical output signal that can be sensed by a recorder.

4-88. In the Overflow Flip-flop, A10Q9 is normally "on" and A10Q10 normally "off". The output of A10Q10 controls the OVERFLOW light through Overflow Light Driver A10Q8, a circuit similar to Gate Light Driver A10Q12 (Paragraph 4-76); when A10Q10 is not conducting, the OVERFLOW light is off. The negative output pulse from A7 that occurs when the display changes from 999999 to 000000, causes the overflow Flip-flop to change state; A10Q9 turns "off" and A10Q10 turns "on". The OVERFLOW light lights, and the voltage at J19 (20 and 45) goes negative to -13.5 volts. The Overflow Flip-flop remains in this state until reset by a positive voltage step from the output of the Reset One-shot (Paragraph 4-89).

4-89. RESET.

4-90. GENERAL. The Reset One-shot provides a +25 volt step Reset signal that resets all RDCA's (Paragraph 4-61), the Overflow Flip-flop (Paragraph 4-87), and turns "on" Inhibit Gate transistor A10Q2. Except when the front-panel GATE CONTROL switch is in the EXTERNAL DUAL position, the Reset One-shot output has no effect on the Main Gate.

4-91. The normal state for the Reset One-shot is A10Q3 "off" and A10Q4 conducting; transistor A10Q5 is an emitter-follower switched between +13 and -15 by the signal at A10Q4 collector. The voltage at A10 R2-C8 junction is normally +6.5 volts, established by voltage divider A10R2 and off-board resistor R3. When the A10R2-C8 junction is grounded, its voltage is made 6.5 volts more negative than before; this voltage is coupled through A10C8, A10CR2, and A10C9 to A10Q4 base, decreasing conduction of that transistor and

causing its collector voltage to go more positive. Flip-flop action (Paragraph 4-15) causes A10Q3 to increase conduction, increasing the negative driving voltage at A10Q4 base. The positive voltage at A10Q4 collector A10Q5 base causes A10Q5 emitter to go to approximately +13 volts. The One-shot resets after 5 μsec and must be re-triggered to obtain another pulse. The A10R2-C8 junction is grounded inside the Model 5280A by contact closure to ground when the front-panel RESET switch is pressed, or externally by contact closure shorting J8 center terminal to ground through another switch or through a saturated NPN transistor, as shown in Figure 4-11.

4-92. The positive-step Reset signal is coupled through A10C15 and A10CR9 to A10Q7 base. However, only when the front-panel GATE CONTROL switch is in the EXTERNAL DUAL position will this signal turn "off" A10Q7, and by flip-flop action (Paragraph 4-15), turn "on" A10Q6, closing the Main Gate as described in Paragraph 4-39. Also, for the duration of the Reset pulse, Inhibit Gate Transistor A10Q2 is conducting, reverse-biasing A10CR6 and preventing Start signals from attempting to open the Main Gate by turning off A10Q6 (Paragraph 4-85).

4-93. The second section of the front-panel RESET switch, by grounding A10Q11 base, closes the Main Gate whenever the pushbutton is pressed, regardless of the position of the GATE CONTROL switch. In MANUAL OPEN position, and in EXTERNAL SINGLE position as long as an "open" signal (Paragraph 4-83) is applied, the Main Gate will be closed as long as the RESET pushbutton is depressed, and will re-open as soon as the switch is released. In EXTERNAL DUAL the Gate Flip-flop changes state when the RESET pushbutton is pressed, and requires a Start signal (Paragraph 4-85) to cause the Main Gate to re-open.

4-94. GATE CONTROL AMPLIFIER ASSEMBLY A11.

Logic Diagram, Figure 4-10
Circuit Diagram, Figure 8-8.

4-95. GENERAL.

4-96. The Gate Control Amplifier Assembly consists of two identical Amplifier-Schmitt Trigger channels that convert input signals at the rear-panel Start and Stop connectors to forms that can be used by the Gate Control Assembly A10. The Polarity Switch selects the Schmitt Trigger output having the correct phase relationship to the gating (input) signal to open or close the Main Gate at the desired time.

4-97. Diodes A11CR1 and A11CR3 limit A11Q1 base voltage to values between +0.6 volt and -0.6 volt; in effect establishing a "window" 1.2 volts high, in which an input signal must appear to produce an output from the Schmitt Trigger. The effective voltage level of the window is adjusted by Level control R1; by which the voltage at the junction of A11R3 and A11C5 can be set to any level between +13 and -15 volts.

4-98. When the signal at J6 has the same magnitude, but opposite polarity, of the voltage established by R1 at the A11R3-A11C5 junction, voltage divider action

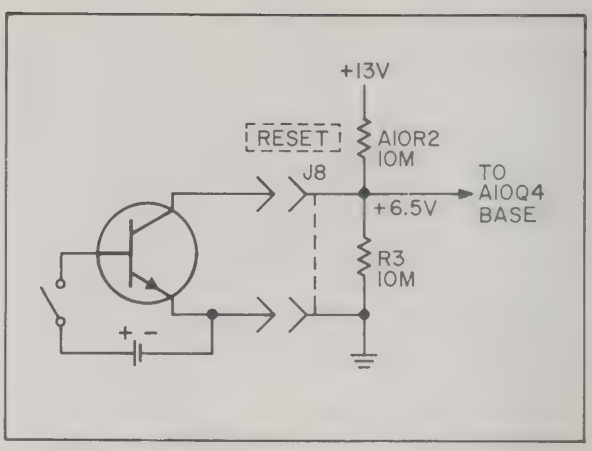

Figure 4-11. Reset Using Saturated NPN Transistor

of A11R1 and A11R3 causes the voltage at their junction (A11Q1 base) to be zero (the resistance of Level control R1 is so small, compared to the other two resistors, that its effect is negligible). When the A11Q1 base voltage is zero, neither diode A11CR1 nor A11CR3 is forward-biased, and the input signal at J6, attenuated 6 dB by the A11R1-A11R3 voltage divider, can appear at A11Q1 base.

4-99. Suppose, for example, that R1 sets the voltage of the A11R3-A11C5 junction at +5.6 volts. An input signal level of -5.6 volts at J6 will, by voltage divider action, cause the voltage at A11R1-A11R3 junction (A11Q1 base) to be 0 volts; neither A11CR1 nor A11 CR3 will be conducting, and changes in input level will reach A11Q1 base. When one of these diodes remains forward-biased, any change in input signal voltage level (which must occur to produce an output) is shorted to ground through the conducting diode. It is possible, and not unlikely, for the input signal to be so large that it will turn off one diode and turn on the one that was not conducting; all this means is that the signal was at least as large as the maximum signal that can appear in the window (1.2 volts peak-to-peak) and reach A11Q1 base.

4-100. From the previous paragraph, regardless of whether the input signal is ac or dc, and regardless of slope, as long as it is large enough to overcome the bias voltage level established by Level control R1 and produce a large enough voltage change in the "window" at A11Q1 base, it will produce an output from the Schmitt Trigger. When the Start input connector is not connected, and the GATE CONTROL switch is set to EXTERNAL SINGLE, the Main Gate can be controlled by merely setting the level control, which established a voltage difference between its setting and zero that can trigger the Schmitt Trigger.

4-101. Input signals that get through the "window" to A11Q1 base drive A11Q3 and appear amplified and inverted at A11Q3 collector. The signal at A11Q3 collector drives the Schmitt-Trigger A11Q5, Q7. (Schmitt Trigger circuit operation is described in Paragraph 4-18.) The output of Schmitt Trigger tran-

sistor Q5 is a 14.5 volt step in phase with the direction of voltage change at the input; A11Q7 output is the same as A11Q5, except inverted.

4-102. POLARITY SWITCH.

4-103. Signals applied at the rear-panel connector J6 and/or J7 control the Model 5280A Main Gate when the front-panel GATE CONTROL switch is set to either EXTERNAL SINGLE or EXTERNAL DUAL position (refer to Paragraphs 4-83 through 4-85 for more information). The Polarity switch selects, as inputs to the Gate Control Assembly A10, the Schmitt-Trigger output having the correct phase relationship to the input signal for desired opening and closing of the Main Gate by the applied signal.

4-104. POWER SUPPLY: RECTIFIER ASSEMBLY A12; REGULATOR ASSEMBLY A13.

Circuit Diagrams: Figure 8-9.

4-105. GENERAL. Several supplies are included in the 5280A. Their characteristics are tabulated in Table 4-4.

Table 4-4. Power Supplies

Supply	Regulated	Remarks
- 15V	Yes	Series reg
+ 13V	Yes	Series reg
+ 20V	Yes	Series reg
-130V	No	-150V ref to +20V
+170V	No	+150V ref to +20V

4-106. PRIMARY POWER. As shown in Figure 8-9 either 115- or 230-volt ac power is connected through an LC filter (C1A, C1B, L1, L2), fuse F1 and front-panel power switch S4 to the primary of power transformer T1. Moving slide switch S5 on the rear panel to the left exposes "115" and connects the primaries in parallel for 115-volt operation. Moving the slide switch to the right exposes "230" and connects the primaries in series for 230-volt operation. Fan motor B1 is connected across a single primary winding; T1 functions as an autotransformer to supply 115 volts to B1 when the instrument is connected for 230 volt operation.

4-107. MINUS 15-VOLT SUPPLY. The regulated -15 volt supply consists of a full-wave rectifier (A12 CR1 through A12CR4) whose output is smoothed by filter L3-C4, regulated by Q2 and further filtered by A12C2. The A13R4, A13R5, A13R6 divider supplies a sample of the regulated output to A13Q2 which amplifies and inverts variations in the sample. The A13Q2 output controls driver A13Q1 which in turn controls regulator Q2. Potentiometer A13R5 permits adjustment of the regulated output voltage by providing a means of adjusting A13Q2 bias.

4-108. REGULATOR OPERATION. Operation may be traced as follows: Suppose the output voltage tends to shift toward -14 volts. This causes the voltage at the A13Q2 base to go in a positive direction resulting in a decrease of conduction and a negative swing in A13Q2 collector voltage, driver A13Q1 increases conduction (A13Q1 emitter and Q2 base voltage go negative); regulator Q2 increases conduction and returns the output voltage to -15 volts.

4-109. OTHER REGULATOR COMPONENTS. Breakdown diode A13CR1 provides a 7-volt reference to the emitter of A13Q2. The A13R1-A13C1 network provides phase correction for stability during transients.

4-110. -130 VOLT AND +170 VOLT SUPPLIES. Two conventional full-wave rectifiers supply unregulated +170 volts and -130 volts. Each rectifier circuit provides a 150-volt output (filtered by C2 and C3), but the circuits are referenced to +20 volts so the actual output voltages (relative to ground) are +170 volts and -130 volts. Note that the -130 volt supply is the source for shunt regulator A13CR2 which provides -56 volts to the -15 volt regulator circuit.

4-111. +13-VOLT AND +20-VOLT SUPPLIES. The +13-volt supply (Q3, A13Q3, and A13Q4; see schematic Figure 8-9) is similar to the -15 volt supply described in Paragraph 4-107. The only significant difference is that the negative leg is grounded while the positive leg provides the regulated output. The +20 volt supply is obtained by adding a 7-volt source to the +13 volt supply. The 7-volt regulator consists of Q4 and A13Q5, both acting as emitter followers. A 7-volt zener diode and a bias adjustment circuit provide the reference voltage for this supply.

SECTION V
MAINTENANCE

5-1. INTRODUCTION.

5-2. This section provides maintenance and service information for the Model 5280A Reversible Counter. Included are a table of recommended test equipment, troubleshooting procedures, repair and adjustment procedures, and an In-Cabinet Performance Check which may be used to verify proper operation of the Reversible Counter.

5-3. INSTRUMENT COVER REMOVAL.

5-4. To remove top or bottom cover, unlock two quarter-turn fasteners which secure cover to instrument. Then slide cover toward rear of instrument. To replace cover, reverse procedure.

WARNING

115/230 VAC AND DC SUPPLY WIRES ARE EXPOSED WHEN EITHER INSTRUMENT COVER IS REMOVED. EXERCISE CAUTION DURING TROUBLESHOOTING, ADJUSTMENT OR REPAIR. TO AVOID DAMAGE, REMOVE POWER FROM INSTRUMENT BEFORE REMOVING OR REPLACING COVERS OR ASSEMBLIES, COMPONENTS OR PLUG-IN.

5-5. AIR FILTER.

5-6. Inspect the air filter (center of rear panel) regularly. Clean it before it becomes dirty enough to restrict air flow. Proceed as follows:

a. Remove top cover from instrument.

b. Remove four screws holding filter in place.

c. Wash filter in solution of warm water and detergent.

d. Remove cleaning solution from filter by shaking. Allow filter to dry completely.

e. DO NOT APPLY ANY COATING COMPOUND TO NON-METAL FILTERS. Coat metal filters with light film of filter oil. We recommend No. 3 Filter Coat from Research Products Company. This adhesive is available in "Handi-Koter" sprayer cans at most heating supply stores, or from your Hewlett-Packard sales and service office.

f. Replace filter and cover.

5-7. TEST EQUIPMENT.

5-8. Recommended test equipment for troubleshooting and performance checking is listed in Table 5-1. Test

Table 5-1. Recommended Test Equipment

Instrument Type	Required Characteristics	Use	Instrument Recommended
Oscilloscope	10 MHz bandwidth, dual trace plug-in, ext sync capability	Observe waveforms during troubleshooting, adjustment and Performance Check	HP Model 175A Oscilloscope HP Model 1750A Dual Trace Vertical Amplifier HP 10003A Voltage Divider Probe (two)
Test Oscillator	Continuously variable from 10 Hz to 2 MHz, 100 mV to 1V output	Troubleshooting Performance Check Waveforms	HP Model 651A Test Oscillator
Low Frequency Generator	Continuously variable from 2 Hz to 10 Hz, 100 mV output	Troubleshooting Performance Check	HP Model 202A Low Frequency Function Generator
Pulse Generator	1 Hz to 100 kHz 100 mV to 1V	Troubleshooting Performance Check Waveforms	HP Model 211B Square Wave Generator
Variable line voltage source with meter	Variable from 103 to 127 Vac (207 to 253 Vac)	Performance Check	
Dc Voltmeter	±.1V to ±300V full scale 10 megohm impedance, 1% accuracy	Troubleshooting Performance Check Dc Voltages	HP Model 412A
BNC-T Adaptor			HP 1250-0072
Power Supply	0V to ±20V	Performance Check	HP Model 721A

instruments other than those listed may be used if their specifications equal or exceed the required characteristics.

5-9. ASSEMBLY DESIGNATIONS AND CONNECTION IDENTIFICATION.

5-10. Table 5-2 gives the reference designations of all printed circuit assemblies used in the Reversible Counter and their corresponding nomenclature. Through the manual, connections to printed circuit assemblies are referred to in abbreviated form. For example, the connection to pin 15 of assembly A6 is A6(15).

Table 5-2. Assembly Designations

A1	Directional Gates and Zero Crossing Assy
A2	Reversible Decimal Counter Assembly (units)
A3	Reversible Decimal Counter Assembly (tens)
A4	Reversible Decimal Counter Assembly (hundreds)
A5	Reversible Decimal Counter Assembly (thousands)
A6	Reversible Decimal Counter Assembly (ten thousands)
A7	Reversible Decimal Counter Assembly (hundred thousands)
A8	Special Order Reversible Decimal Counter Assembly
A9	Special Order Reversible Decimal Counter Assembly
A10	Gate Control Assembly
A11	Gate Control Amplifier Assembly
A12	Rectifier Assembly } Power Supply
A13	Regulator Assembly } Power Supply

5-11. IN-CABINET PERFORMANCE CHECK.

5-12. GENERAL. The In-Cabinet Performance Checks, Table 5-4, and Performance Check Test Card (to be filled out during incoming inspection) page 5-11a, verify specifications and provide a permanent record of the performance of each instrument. The In-Cabinet Performance Check, Table 5-4, verifies proper operation of all circuits in Model 5280A Reversible Counter and may be used:

a. As part of an incoming inspection check of instrument specifications;

b. periodically, for instruments used in systems where maximum reliability is of utmost importance;

c. as part of a troubleshooting procedure to locate malfunctioning circuits, and

d. after any repairs or adjustments, before returning instrument to regular service.

5-13. VARIABLE LINE VOLTAGE. During the Performance Check, Table 5-4, the Reversible Counter should be connected to power source through a variable voltage device so that line voltage may be varied ±10% from nominal (115 or 230 Vac) to assure proper operation of Reversible Counter under various supply conditions.

5-14. POWER SUPPLY ADJUSTMENT.

CAUTION

When troubleshooting or adjusting the power supply, do not short supplies to ground or to each other. This will damage the diodes and transistors.

a. Set line voltage to normal value (115 or 230 Vac).

b. Connect DC Voltmeter to A13(4).

c. Voltmeter should read +13 Vdc ±0.5 Vdc. If voltage is outside this range adjust A13R5 (-15 volts adjust), see Figure 8-9.

d. Connect DC Voltmeter to A13(1).

e. Voltmeter should read +20 Vdc ±0.5 Vdc. If voltage is outside this range, adjust A13R17 (+20 volt adjust), see Figure 8-9.

f. Connect DC Voltmeter to A13(13).

g. Voltmeter should read -15 Vdc ±0.5 Vdc. If voltage is outside this range adjust A13R5 (-15 volts adjust), see Figure 8-9.

h. Check all supply voltages at locations, and under conditions shown in Table 5-3.

Table 5-3. Power Supply Voltages

Test Point	Line Voltage			Adjustment
	103	115	127	
A12(15)	-120 ±12	-130 ±13	-150 ±15	None
A12(12)	+160 ±16	+170 ±17	+180 ±18	None
A13(13)	- 15 ±.5	- 15 ±.5	- 15 ±.5	A13R5
A13(4)	+ 13 ±.5	+ 13 ±.5	- 13 ±.5	A13R12
A13(1)	+ 20 ±.5	+ 20 ±.5	+ 20 ±.5	A13R17
A13(8)	-6.9 ± 1	-6.9 ± 1	-6.9 ± 1	Depends on adjustment of +20Vdc and -15Vdc above
A13(10)	+17.6 ± 1	+17.6 ± 1	+17.6 ± 1	

5-15. TROUBLESHOOTING.

5-16. GENERAL.

5-17. When a malfunction is suspected, make an In-Cabinet Performance Check. If the Reversible Counter checks properly, check all of the connections to associated equipment. If Reversible Counter does not check out properly, refer to Section IV, Theory of Operation, for circuit descriptions; Table 5-2 for Assembly Designations; Figures 8-1 and 8-2 for top and bottom component location; and Section VIII for assembly component location circuit diagrams, wave-

forms, and dc voltages. Remove top and bottom covers (Paragraph 5-4) and make a thorough visual inspection. During the visual inspection look for burned or loose components, loose wire connections, or any other conditions which may suggest a source of trouble. Repair any faulty component or connection that is isolated during the visual inspection and make an In-Cabinet Performance Check before continuing. In troubleshooting this instrument, much depends on your ability to interpret circuit conditions by using the information available from the readout and control settings; to be able to do this well, you must understand the Principles of Operation presented in Section IV of this manual. The procedure of Paragraph 5-22 provides a quick check of counter operation by operating it through all counting sequences; it should enable you to find which assembly is causing trouble, and also help to identify the parts of the circuit that are operating correctly. More detailed troubleshooting suggestions are given following the check. After location of faulty state, use dc voltages given on schematic diagrams to help locate faulty component or connection. Repair any faulty component that is found and make the In-Cabinet Performance Check before returning the Reversible Counter to service.

5-18. SUBSTITUTION.

5-19. Troubleshooting may be greatly simplified if checking is done by replacing the assembly suspected of malfunction with a spare assembly known to be operating correctly. When the malfunctioning assembly is found, trouble then may be traced to the individual components responsible for the malfunction, or the malfunctioning assembly may be shipped to your Hewlett-Packard Sales and Service Office for repair.

5-20. PRINTED CIRCUIT COMPONENT REPLACEMENT.

5-21. Component lead holes in the Model 5280A circuit boards have plated walls to ensure good electrical contact between conductors on the opposite sides of the board. To prevent damage to this plating and to the replacement component, apply heat sparingly and work carefully. The following replacement procedure is recommended.

a. Remove defective component.

b. Melt solder in component lead holes. Use clean dry soldering iron to remove excess solder. Clean holes with toothpick or wooden splinter. Do not use metal tool for cleaning as it may damage through-hole plating.

c. Bend leads to replacement components to correct shape and insert component leads into component lead holes. Using heat and solder sparingly, solder leads in place. Heat may be applied to either side of the board. A heat sink (longnose pliers, commercial heat-sink tweezers, etc) should be used when replacing transistors and diodes.

d. Through-hole plating breaks are indicated by the separation from the board of the round conductor pad on either side of the board. To repair breaks, press conductor pads against board and solder replacement component lead to conductor pad on both sides of board.

5-22. QUICK CHECK OF OPERATION

a. STARTING CONDITIONS.

1) Model 5285A Plug-in installed in front-panel compartment.

2) Power OFF.

3) GATE CONTROL: MANUAL CLOSED

4) Plug-in MODES: "A + B", "+"

5) TRIGGERS (A and B) "DC XI" "0"

b. Turn Power ON.

1) At least one numeral in each readout column should be lighted. Display will probably not be all zeros, and the OVERFLOW light may be lighted.

2) Only one polarity sign should be lighted.

c. Press RESET button. Display should be all zeroes and OVERFLOW light should be off.

d. Connect a 100 kHz, 1-volt rms signal through a 50-ohm feedthrough termination to Plug-in "A" input.

e. Set GATE CONTROL to MANUAL OPEN. The GATE light should light, and the counter display should change in a 1, 2, 3... sequence with the numbers in the left column changing at a one-per-second rate. The sign of the display should be "+". At the end of 10 seconds the OVERFLOW light should light. It may be necessary to adjust the TRIGGER level to get the counter to count.

f. Change input signal frequency to 10 kHz.

g. Without resetting, change Plug-in MODES to "-". Counter should be counting in a 9, 8, 7... sequence, with the numbers in the second column changing at a one-per-second rate. Observe the counting sequence in each of the remaining columns by using input frequencies of 1 kHz, 100 Hz, 10 Hz, and 1 Hz (if available).

h. Let the counter count through zero. The counting sequence should be ..."+000002", "+000001", "+000000", "-000001", "-000002", etc., and the display will increase in a negative direction. Observe the counting sequence of each column, using input frequencies of 10 Hz, 100 Hz, 1 kHz, 10 kHz, and 100 kHz.

i. Without resetting, change Plug-in MODES to "+". The magnitude of the display should decrease to zero, then the sign should change to "+", and the display magnitude increase.

j. Press RESET button. The display should reset to "+000000", the GATE light should go off, and the OVERFLOW light should go off. The GATE light remains off as long as the RESET button is pressed.

k. Set GATE CONTROL to MANUAL CLOSED. Display should not change.

l. Disconnect input signal from "A" and connect it to "B" input.

m. Set GATE CONTROL to MANUAL OPEN. The GATE light should light, and the counter should increase magnitude with a "+" sign displayed.

n. Without resetting, change MODE to "-". The "+" sign should remain on until the count decreases to zero, when the sign changes to "-" and the count increases. This completes the test.

5-23. The following paragraphs present some aids to help find the cause of your problem if your counter failed to pass the Quick Check above. Remove the top and bottom covers as described in Paragraph 5-3.

5-24. POWER SUPPLY VOLTAGES.

5-25. The power supply voltages should be within the limits shown in Table 5-3.

5-26. COUNTER DOESN'T COUNT.

5-27. GENERAL. The check in Paragraph 5-22 provided several different paths which should have made the counter count. All these paths went from the Plug-in through A1, to the RDCA's. The most important, and easiest, check to make is to get the counter to count away from zero (increase magnitude). Use a 1 MHz input signal when making the signal checks called for below. Be sure you understand the A1 and RDCA theory in Section IV.

5-28. Check to be sure there is a signal from the Plug-in at the input to A1; there should be both a 1 MHz signal and an "increase" signal to the direction gates (with MODES switch set to "+"). If these signals are absent, check the plug-in; if they are present, proceed with further checks of the counter. Check for an output signal at A1(F); with the display all zeroes, any count will cause an increase in magnitude and an output at this terminal (See Figure 8-5). If this signal is present, check the RDCA's; if absent check A1 and A10.

5-29. Removing Gate Control Assembly A10 should cause the Main Gate on A1 to remain in its "open" condition. Because the GATE light is driven by a circuit on A10, it will not be lighted even though the gate is open; the OVERFLOW light will not work either. Look again for a signal at A1(F); if this signal is present when A10 is removed, but not with A10 installed (GATE switch in MANUAL OPEN), check A10 (see Paragraph 5-35).

5-30. SIGN BINARY. The Sign Binary A1Q6 and A1-Q7 acts like a DPDT polarity reversing switch. You can force the sign binary to be in either of its two states by connecting -15 volts through a 10K resistor to the base of the transistor you wish to turn off. Turning off A1Q6 means the count will increase magnitude in a positive direction ("+" sign of display); and turning off A1Q7 will cause the count to increase magnitude in a negative direction ("-" sign of display). Turning off one transistor in the Sign Binary should cause the other Sign Binary transistor to turn on. Either transistor can be forced "on" by connecting +13 volts through a 10K resistor to its base. There is no advantage to turning both Sign Binary transistors "off" or "on" at the same time.

5-31. ZERO STATE DETECTOR. The Zero State Detector A1Q5 is part of an "AND" gate that requires that no RDCA is connecting the Zero State Line to -15 volts through its Q13 (see schematic diagrams Figures 8-5 and 8-6). When the display is all zeroes, A1Q5 conducts, forward-biasing the following diodes on A1: CR13, CR14, CR15, CR17, CR21, CR22. Gate Drive Amplifiers A1Q10 and A1Q11 are biased "off", reverse-biasing diodes CR23 through CR26.

5-32. Because a change in count in either direction away from zero ("+" or "-") represents an increase in magnitude, the output of both the Positive Direction and Negative Direction One-shots is connected to the Increase Magnitude One-Shot through CR22 or CR21. The sign of the display is determined by allowing the pulse from the Positive Direction One-shot or Negative Direction One-shot to drive the Sign Binary to its appropriate state through the gate of CR13 and CR14, which was enabled by the Zero State Detector conducting.

5-33. When the Zero State Detector is conducting, both Gate Drive Amplifiers are "off". At all other times, one Gate Drive Amplifier transistor will be conducting and the other will be off. There is no time at which both Gate Drive Amplifier transistors should be conducting. Gate Drive Amplifier A1Q10 conducts when the display sign is "+"; A1Q11 conducts when the display sign is "-".

5-34. You can keep the Zero State Detector in its "off" or "not zero" state by connecting -15 volts through a 10K resistor to A1Q5 base. Doing this will enable you to drive the RDCAs through "zero" and still have the count decrease; the counting sequence will be: "000002", "000001", "000000", "999999", "999998", etc. The gates to the Sign Binary and Increase Magnitude One-shot (that are enabled by the Zero State Detector) will remain closed, and the display sign will not change at zero. If the MODES polarity is reversed, the count will decrease to zero, then oscillate between zero and 1.

5-35. COUNTS WHEN MAIN GATE IS SUPPOSED TO BE CLOSED.

5-36. GENERAL. The basic problem here is to try to determine whether this condition is caused by an input signal getting through (or around) the Main Gate, or whether some stray signal (power supply ripple, for example) is being introduced into the circuit. This problem is more difficult to trace than the one where the counter doesn't count when it should.

5-37. You can determine whether the problem comes from the input signal by varying the input signal frequency and seeing whether the frequency of the undesired count also changes. The Main Gate can be forced closed by connecting the anode of A1CR9 and A1CR10 to ground through a 1K resistor. This should determine whether the problem comes before or after the Main Gate. Also try switching RDCAs.

5-38. TROUBLESHOOTING THE RDCAs.

5-39. GENERAL. To check an RDCA you think is bad, proceed as follows:

a. Turn counter power OFF.

b. Remove top cover.

c. Switch suspect RDCA with A2.

d. Set counter and plug-in controls as follows:

GATE CONTROL . . . . . MANUAL OPEN
MODES . . . . . "A", "+"
TRIGGERS "AC X1" . . . . . "0"

e. Turn power ON.

f. Press RESET button. The display on all RDCA's should be "0".

g. Rotate the plug-in Channel A trigger level control through "0" to get the suspected RDCA to change its display one numeral at a time. The sign of the display should be "+", and the count should increase, eg. 1, 2, 3, 4, 5, 6, 7, 8, 9, 0. Do this until you get a count of twenty, then reverse the MODES polarity and make the counter count back to zero.

h. Connect a 2 MHz 1-volt rms signal through a 50-ohm feedthru to Input A. Counter should be able to count this signal. It may be necessary to adjust the trigger level to get the counter to count. This completes the RDCA check.

5-40. In troubleshooting an RDCA, remember that Binaries B, C, and D change state not due to some other binary changing state, but when they receive a signal from the In Increase One-shot or In Decrease One-shot through a diode gate that is enabled by some other binary. The signal from the one-shot is a negative pulse to the base of the conducting transistor to turn it off and the other transistor on. Figures 4-6 and 4-7 show the condition of each binary for digits 0 through 9, and the gates that are enabled for increasing or decreasing magnitude. In normal operation the RDCA would not receive an increase magnitude and decrease magnitude pulse at the same time. Every increase or decrease magnitude pulse from A1 or the previous RDCA is connected to Binary A. Binary A controls the gating of these pulses to the In Increase One-shot or In Decrease One-shot, so these in effect put out one pulse for every two input pulses to the RDCA.

5-41. You can force any one or more of the four binaries to be in its required state for any number by turning off one transistor, turning on one transistor, or both. To turn off a Binary transistor, connect -15 volts through 1K to its base. To turn a Binary transistor on, connect +20 volts through 10K to its base. Typical voltages for conducting and non-conducting Binary transistors are given on the RDCA schematic, Figure 8-6. In each binary only one transistor should be on and off. Voltages more than two or three tenths of a volt away from the values given on the schematic are likely to be indications of trouble, such as leaky diodes.

5-42. As an example of what can be done using the above technique, suppose that the counter counts 1, 2, 3, 2, 3, etc. By looking at the schematic diagram, you can see that lighting "0" requires $\overline{A}$, $\overline{B}$, and $\overline{D}$; "1" requires A, $\overline{B}$, and $\overline{D}$; "2" requires $\overline{A}$, B, and $\overline{C}$; "3" requires A, B, and $\overline{C}$; and "4" requires $\overline{A}$, B, and C. It appears that it is impossible to get Binary C to switch out of its $\overline{C}$ state. You can attempt to force C into its C state by connecting -15 volts to Q10 base to turn that transistor off and Q9 on. This should cause the numbers "6" and "0" to appear when the counter is reset, and the counting sequence would be "0 and 6", "1 and 5", "6 only", "7 only", then starting again at "0 and 6". The signal that would normally cause the C binary to change during an increasing count would be the one from the In Increase One-shot through CR35 to Q10 base to turn off Q10. Diode CR35 is part of Q10, and is enabled when binary B is in its B state, as it is for both "2" and "3".

5-43. TROUBLESHOOTING THE GATE CONTROL ASSEMBLY.

5-44. GENERAL. In normal operation all controlling of the Main Gate is done by the Gate Controller A10Q11; the Main Gate is open when this transistor is not conducting. The Main Gate and Gate Controller circuit is shown in Figure 5-1. The Main Gate is closed whenever the Gate Controller transistor is conducting; it can be forced closed by connecting the junction of A1CR9 and A1CR10 to ground through a 1K resistor.

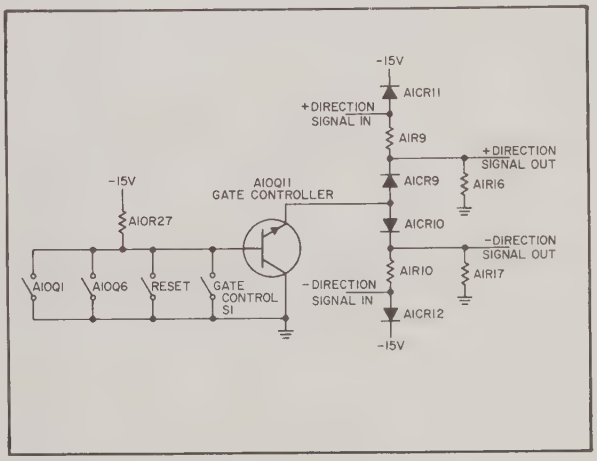

Figure 5-1. Simplified Gate Control Schematic

5-45. The Gate Controller conducts when its base is grounded; this can be done in one of four ways: 1) A1Q1 conducting; 2) A1Q6 conducting; 3) RESET button depressed; 4) GATE CONTROL switch set to MANUAL CLOSED. Refer to Section IV for details of Gate Control operation.

5-46. GATE LIGHT CIRCUIT. This circuit is easy to troubleshoot, if you remember that the GATE light requires a high voltage to fire and that its driver transistor acts as a shunt that turns the light off when the transistor is conducting: eg. transistor off equals light on, and vice versa. The transistor light driver is an NPN-type transistor, requiring a negative voltage at its base to turn it off. Since the GATE light is on when the Main Gate is open, A10Q11's emitter must go negative to open the gate and turn on the light. The bias voltage to A10Q11 emitter comes from the Main

Gate circuit on A1. Note that the GATE light circuit is not tied directly to the Main Gate, and that the Main Gate can be open and the light off, or vice versa. Because the Gate Controller provides an inhibit signal to the main gate, you can cause the Main Gate to remain open by removing A10. (Removing A10 means that the counter display cannot be reset using the RESET button. However, by momentarily connecting +13 volts through 1K to the reset line, most easily done by jumpering XA10(P) and XA10(12).

5-47. OVERFLOW LIGHT. The OVERFLOW light driver is similar in operation to the GATE light driver. The Overflow Flip-flop circuit is quite touchy; almost any measurement probe causes it to change states. If this circuit seems to be intermittent, try switching A7 and some other RDCA to attempt to get a slightly larger driving signal. The RDCA Out-Increase One-shot pulse width is 0.25 microsecond, and at the output of A7 these pulses occur only once-per-second with a 1 MHz input signal, so they are hard to see. You can trace the driving signal path through the Overflow Flip-flop with an oscilloscope using the Overflow circuit. Connect a jumper from XA2(9) to XA10(10), the driving signal frequency is 1/10 the input signal frequency.

5-48. RESET CIRCUIT. The Reset pulse is the positive voltage step generated when A10Q5 conducts; the RDCAs are held in their "reset" state as long as the voltage at A10Q5 emitter is at its positive level. A10Q5 is turned "off" by the conduction of A10Q4, it can also be held in its off state by connecting its base to ground. Transistor A10Q4 is ordinarily conducting, and is turned off by a negative pulse at its base, or by connecting its base to -15 volts through a 10K resistor. Transistor A10Q3 has no effect at low frequencies and in Manual Operation; the Reset circuit works just as well with A10Q3 installed as with it removed, except that if A10Q3 is shorted, no reset signal can get to A10Q4 base. A10Q3 is primarily an inverter to provide the capability of using a positive voltage step to generate the Reset pulse. The negative pulse required to turn off A10Q4 is generated by contact closure to ground, either by the Reset switch or at the rear-panel RESET connector. This contact closure makes the junction of A10R2 and A10C8 go 13 volts negative, and is coupled through A10CR2 and A10C9 to A10Q4. Note that all inputs to the Reset circuit are ac coupled.

5-49. DC CONTROL AMPLIFIER. The DC control amplifier is enabled only when the GATE CONTROL switch is in EXTERNAL SINGLE. In this mode, the Main Gate is opened when the gating signal at the START input is more positive (or more negative) than the level set by the start LEVEL control, as determined by the setting of the POLARITY switch S3. You can check the DC Control Amplifier by setting the GATE CONTROL switch to EXTERNAL SINGLE, and removing A11; the Main Gate should open. Connect -15 volts to A10(B) through 10K; the Main Gate should close as transistor A10Q1 is turned off, allowing A10Q11 to be turned off by the -15 volts at its base through A10R27.

5-50. GATE FLIP-FLOP. The Gate Flip-flop has control of the Main Gate during EXTERNAL DUAL operation. The best way to check these circuits and the ones on A11 is to connect a signal to the START and STOP inputs on the rear panel. The measurement conditions should be those used for making the waveform pictures of Figure 8-7. Trace the Start signal through A11 and the Start line to A11Q6 base. This signal must turn A11Q6 off to open the Main Gate. Repeat this procedure for the Stop signal. This signal must turn A11Q7 off to close the gate.

5-51. INHIBIT CIRCUIT. When A10Q2 is conducting, signals on the Start input are attenuated and have no effect on the Gate Flip-flop; the Main Gate remains closed in EXTERNAL DUAL until the attenuation is removed and a Start signal can turn A10Q6 off. Transistor A10Q2 is turned on either by the reset signal or by grounding A10(11).

Table 5-4. In-Cabinet Performance Check *

*Unless otherwise noted, the following tests must be performed with a Model 5285A Universal Input Plug-in installed in the Model 5280A.

GENERAL

1. RANGE: Dc to 2 MHz Channel A or Channel B.

a. Set Counter and Plug-in controls as follows:

POWER	ON
GATE CONTROL	MANUAL OPEN
MODES	A, (+)
TRIGGERS	DC VOLTS X1
LEVEL	0

b. Connect Low Frequency Generator output through BNC "T" to Plug-in "A" INPUT. Connect Oscilloscope to other "T" port to monitor input signal.

c. Set Low Frequency Generator to provide .1 volt rms (.28 V p-p on Oscilloscope) at Plug-in INPUT.

d. Tune Low Frequency Generator between zero and 1200 Hz. Note that Counter display increases in magnitude (totalizes counts), and that the rate of magnitude change increases as the input frequency increases.

e. Replace Low Frequency Generator with Test Oscillator as signal source. Set Test oscillator to provide .1 volt rms (.28 V p-p) at Plug-in INPUT.

f. Tune Test Oscillator from 1200 Hz to 2 MHz. Note that count increases and OVERFLOW light comes on, and that rate of count increase is proportional to input frequency.

g. Repeat steps b through f for Plug-in "B" INPUT. Set MODES to B (+).

NOTE: If Counter fails to count, check for presence of trigger signals at rear-panel MONITOR connectors. If trigger is not present, Plug-in may be defective.

2. RESET: Remote by contact closure or saturated NPN transistor to ground. Input via rear-panel BNC. Manual by front-panel pushbutton.

a. Set Counter and Plug-in controls as follows:

POWER	ON
GATE CONTROL	MANUAL OPEN
MODES	A, (+)
TRIGGERS	DC VOLTS X1
LEVEL	0

b. Connect Test Oscillator to "A" INPUT. Set level to provide 1 volt rms signal. Set frequency so counting can be observed. Note that GATE light is lighted.

c. Short center terminal of RESET connector to ground. Note that GATE light goes out and Counter display resets to 000000.

d. Remove short from RESET connector. GATE light should light and Counter start counting.

e. Press front-panel RESET button. Note that GATE light goes out and Counter display resets to 000000.

Table 5-4. In-Cabinet Performance Check (continued)

3. INHIBIT: Start channel is inhibited during reset time with the GATE CONTROL switch in the EXTERNAL DUAL position only. Inhibit released at end of reset time.

This item checked as part of EXTERNAL DUAL GATE CONTROL check, item 6.

4. GATE LIGHT. GATE light indicates main gate open.
This item checked as part of RESET check, item 2.

GATE CONTROL

5. MANUAL: Controlled by front-panel function switch for OPEN and CLOSED positions.
This item checked as part of RESET check, item 2.

6. EXTERNAL DUAL

INPUT: Separate BNC's on rear panel for START and STOP inputs.

SENSITIVITY: 1 volt rms. 2 volt p-p pulse input.

IMPEDANCE: Approximately 100K ohms. 25 pf.

TRIGGER LEVEL: +10 volts to -10 volts, adjustable at the rear panel. Independent controls on each input.

POLARITY: + or - rear-panel switch selects triggering slope.

a. Set Counter controls as follows:

POWER	ON
GATE CONTROL	EXTERNAL DUAL
POLARITY (rear panel)	(+)
LEVEL (rear-panel START and STOP)	0

b. Press RESET button to close gate.

c. Set Square Wave Generator to 10 Hz, level to 1 volt rms.

d. Connect Signal Generator to rear-panel START and STOP connectors. Observe gate light; it should go on and off at the 10 Hz rate.

e. Repeat steps d through g with rear-panel POLARITY switch set to (-).

f. Turn both START and STOP LEVEL controls fully clockwise.

g. Set DC Power Supply to provide +10 volts for use as gate control signal, connect to START input.

h. Press RESET button to close gate.

i. Set rear-panel POLARITY switch to (+).

j. Rotate START LEVEL control counterclockwise until GATE light lights.

k. Disconnect Power supply from START input and connect it to STOP input connector.

l. Slowly rotate STOP LEVEL control counterclockwise until GATE light goes out.

m. Set Power Supply to provide -10 volts output.

n. Connect Power Supply to START input connector.

o. Rotate START LEVEL control counterclockwise until GATE light lights.

p. Disconnect Power Supply from START input connector and connect it to STOP input connector.

Table 5-4. In-Cabinet Performance Check (continued)

q. Rotate STOP LEVEL control counterclockwise until GATE light goes out.

r. Set POLARITY switch to (-).

s. Connect Power Supply to START input. Starting from fully counterclockwise position, slowly rotate START LEVEL control clockwise until GATE light lights.

t. Connect Power Supply to STOP input. Starting from fully counterclockwise position, slowly rotate STOP LEVEL control clockwise until gate light goes off.

u. Set Power supply to provide +10 volts output.

v. Connect Power Supply to START input.

w. Rotate START LEVEL control clockwise until GATE light lights.

x. Disconnect Power Supply from START input and connect it to STOP input.

y. Rotate STOP LEVEL control clockwise until GATE light goes out.

7. EXTERNAL SINGLE

INPUT: START BNC on rear panel.

SENSITIVITY: 1 volt rms. 2 volts p-p pulse input.

IMPEDANCE: approximately 100K ohms. 25 pf.

TRIGGER LEVEL: +10 volts to -10 volts, adjustable at rear panel.

POLARITY: + or - rear panel switch selects gate open polarity.

GATE: (+) OPENS when input is positive with respect to the trigger level. Closes when input is negative with respect to the trigger level. (-) Inverse of (+). Manually switched dc voltage is a satisfactory gating input.

a. Set Counter controls as follows:

POWER	ON
GATE CONTROL	EXTERNAL SINGLE
POLARITY (rear panel)	(+)
START LEVEL	fully clockwise

b. Set DC Power Supply to provide +10-volt gate control signal. Connect Power Supply to START input connector.

c. Rotate START LEVEL counterclockwise until GATE light just goes off. Set DC voltage to 10.5V. GATE light should come on.

d. Set POLARITY to (-) and rotate START LEVEL clockwise until GATE light just goes off. Set DC voltage to 9.5V. GATE light should come on.

e. Set DC Power Supply for -10 volts. Rotate START LEVEL counterclockwise, then clockwise until GATE light just goes off. Set DC voltage to -10.5V. GATE light should come on.

f. Set POLARITY to (+) and rotate START LEVEL counterclockwise until GATE light just goes off. Set DC voltage to -9.5V. GATE light should come on.

PRINTER OUTPUT

8. OUTPUT : 4-line 1-2-4-8 BCD

"0" State level approximately -14 volts.
"1" State level approximately +14 volts.
IMPEDANCE: 100 K ohms each line.

a. The impedances are determined by fixed value 100K ohm resistors, as shown in Figure 8-6 .

Table 5-4. In-Cabinet Performance Check (continued)

b. Set Counter and Plug-in controls as follows:

POWER	ON
GATE CONTROL	MANUAL OPEN
MODES	A, (+)
TRIGGERS	DC VOLTS X1
LEVEL	0

c. Connect Test Oscillator to Channel A INPUT and set to frequencies as shown below to check each column. Set output level for 1 volt rms (2.8 volts p-p).

d. Connect Oscillosocpe to the J9 pins indicated to verify output alternating between -14 volts and +14 volts (28-volt step) as Counter is counting.

J9 pins	RDCA	Test Oscillator Frequency
1, 2, 26, 27	A2	100 Hz
3, 4, 28, 29	A3	1000 Hz
5, 6, 30, 31	A4	10 kHz
7, 8, 32, 33	A5	100 kHz
9, 10, 34, 35	A6	1 MHz
11, 12, 36, 37	A7	1 MHz
(13, 14, 38, 39	A8	1 MHz)*
(15, 16, 40, 41	A9	1 MHz)*

*These outputs available only on specially ordered instruments.

9. REFERENCE LEVELS: 0 volts for "0" and "1" states.

a. BCD Reference output voltages for printer operation are supplied at Pins 24 and 25 of the printer jack in HP Solid State Electronic Counters. In the Model 5280A, these pins are wired directly to chassis ground (see schematic diagram, Figure 8-9).

10. PRINT COMMAND: Positive 15-volt step from -15 volts to 0 volts.

a. Set Counter Controls as follows:

POWER	ON
GATE CONTROL	MANUAL OPEN

b. Connect Oscilloscope to J9 (23).

c. Set Oscilloscope for DC input.

d. Press RESET button. Note on Oscilloscope a positive-step voltage change of 15 volts.

11. HOLD-OFF REQUIREMENTS: Externally applied level change from zero volts or more negative than zero volts to +10 volts. (Effective with GATE CONTROL switch in EXTERNAL DUAL position only.)

a. Set Counter and Plug-in controls as follows:

POWER	ON
GATE CONTROL	EXTERNAL DUAL
MODES	A, (+)
TRIGGERS	AC VOLTS X1
LEVEL	0
POLARITY (rear panel)	(+)
START LEVEL	fully clockwise to (-)

b. Connect Test Oscillator through BNC "T" connector to Plug-in "A" INPUT and Counter rear-panel START connector.

Table 5-4. In-Cabinet Performance Check (continued)

c. Set Test Oscillator for 1 kHz, 1 volt rms output. Note that GATE light is lighted and Counter is counting.

d. Set Power Supply to provide +10 volts.

e. Connect Power Supply ground to J9(50) and "hot" lead to J9(22). Reset Counter to 000000. The Counter should stay at 000000 until the +10 volts is removed from J9 (22).

f. Remove +10 volts from J9(22). GATE light must light and Counting start.

12. OVERFLOW: Single line output, 100K ohm impedance.
"OFF" level approximately +17 volts, "ON" level approximately -13 volts.

a. Impedance determined by fixed value 100K ohm resistor, as shown in Figure 8-6.

b. Set Counter and Plug-in controls as follows:

POWER	ON
GATE CONTROL	MANUAL OPEN
MODES	A, (+)
TRIGGERS	AC VOLTS X1
LEVEL	0

If necessary, press RESET button to turn off OVERFLOW light.

c. Connect DC Voltmeter between J9 (20) or J9(45) and ground.

d. With OVERFLOW light off, voltmeter indication should be approximately +17 volts.

e. Connect Test Oscillator, set for 1 MHz, 1 volt rms, to Plug-in "A" INPUT. OVERFLOW light comes on after about 10 seconds.

f. With OVERFLOW light on, Voltmeter indication should be approximately -13 volts.

13. ± NIXIE SIGN (indicates sign of count): Single line output, 100K ohms impedance. + level approximately -15 volts, - level approximately +13 volts.

a. Set Counter and Plug-in Controls as follows:

POWER	ON
GATE CONTROL	MANUAL OPEN
MODES	A, (+)
TRIGGERS	AC VOLTS X1
LEVEL	0

b. Connect DC Voltmeter between J9(17) and ground.

c. Connect Test Oscillator to Plug-in "A" INPUT.

d. Set Test Oscillator to 1 MHz, 1 volt rms.

e. Note that + sign is lighted at left of Counter display, and Count increases in positive direction. Voltmeter indication should be approximately -15 volts.

f. Change MODES TO A, (-). Note that count decreases to 000000 with (+) sign lighted at left of counter display. Sign changes to (-) at 000000 and count then increases in negative direction. Voltmeter indication must change to approximately +13 volts when polarity sign indication changes from (+) to (-).

PERFORMANCE CHECK TEST CARD

Hewlett-Packard Model 5280A
Reversible Counter
Serial No.: _____ - _____

Tests Performed by: _____
Date: _____

CHECK	INDICATION	
1. RANGE	DC to 2 MHz	
2. RESET	REMOTE	
	Front-panel	
3. INHIBIT	Checked as part of Item 6	
4. GATE LIGHT	Checked as part of Item 2	
5. GATE CONTROL: MANUAL	Checked as part of Item 2	
6. GATE CONTROL: EXT. DUAL	SENSITIVITY: 1V rms	
	TRIGGER LEVEL: +10V/-10V	
	POLARITY: Correct slope	
7. GATE CONTROL: EXT. SINGLE	SENSITIVITY: 1V rms	
	TRIGGER LEVEL: +10V/-10V	
	POLARITY: correct gating	
8. PRINTER OUTPUT: OUTPUT	"+14V/-14V	
9. REFERENCE LEVEL	Wired, no check	
10. PRINTER OUTPUT: PRINT COMMAND	Positive 15-volt step	
11. PRINTER OUTPUT: HOLD-OFF REQUIREMENTS	Voltage step +10 volts	
	Holds off.	
12. OVERFLOW	OFF +17V	
	ON -13V	
13. ± NIXIE SIGN	+ = -15V	
	- = +13V	

SECTION VI
REPLACEABLE PARTS

6-1. INTRODUCTION.

6-2. This section contains information for ordering replacement parts. Table 6-1 lists parts in alpha-numerical order of their reference designators and indicates the description and HP stock number of each part, together with any applicable notes. Table 6-2 lists parts in alpha-numerical order of their HP stock number and provides the following information on each part;

a. Description of the part (see list of abbreviations below).

b. Typical manufacturer of the part in a five-digit code; see list of manufacturers in Table 6-3.

c. Manufacturer's part number.

d. Total quantity used in the instrument (TQ column).

6-3. Miscellaneous parts are listed at the end of Table 6-1.

6-4. ORDERING INFORMATION.

6-5. To obtain replacement parts, address order or inquiry to your local Hewlett-Packard Field Office (see lists at rear of this manual for addresses). Identify parts by their Hewlett-Packard stock numbers.

6-6. To obtain a part that is not listed, include:

a. Instrument model number.

b. Instrument serial number.

c. Description of the part.

d. Function and location of the part.

REFERENCE DESIGNATORS

A	=	assembly	E	=	misc electronic part	P	=	plug	V	=	vacuum, tube, neon bulb, photocell, etc.
B	=	motor	F	=	fuse	Q	=	transistor			
BT	=	battery	FL	=	filter	R	=	resistor	VR	=	voltage regulator
C	=	capacitor	J	=	jack	RT	=	thermistor	W	=	cable
CP	=	coupler	K	=	relay	S	=	switch	X	=	socket
CR	=	diode	L	=	inductor	T	=	transformer	Y	=	crystal
DL	=	delay line	M	=	meter	TB	=	terminal board			
DS	=	device signaling (lamp)	MP	=	mechanical part	TP	=	test point			

ABBREVIATIONS

A	=	amperes	H	=	henries	NPN	=	negative-positive-negative	RMS	=	root-mean square
A.F.C.	=	automatic frequency control	HEX	=	hexagonal	NRFR	=	not recommended for field replacement	RWV	=	reverse working voltage
AMPL	=	amplifier	HG	=	mercury	NSR	=	not separately replaceable	S-B	=	slow-blow
B.F.O.	=	beat frequency oscillator	HR	=	hour(s)	OBD	=	order by description	SCR	=	screw
BE CU	=	beryllium copper	IF	=	intermediate freq	OH	=	oval head	SE	=	selenium
BH	=	binder head	IMPG	=	impregnated	OX	=	oxide	SECT	=	section(s)
BP	=	bandpass	INCD	=	incandescent	P	=	peak	SEMICON	=	semiconductor
BRS	=	brass	INCL	=	include(s)	PC	=	printed circuit	SI	=	silicon
BWO	=	backward wave oscillator	INS	=	insulation(ed)	PF	=	picofarads = 10 farads	SIL	=	silver
CCW	=	counter-clockwise	INT	=	internal	PH BRZ	=	phosphor bronze	SL	=	slide
CER	=	ceramic	K	=	kilo = 1000	PHL	=	Phillips	SPG	=	spring
CMO	=	cabinet mount only	LH	=	left hand	PIV	=	peak inverse voltage	SPL	=	special
COEF	=	coefficient	LIN	=	linear taper	PNP	=	positive-negative-positive	SST	=	stainless steel
COM	=	common	LK WASH	=	lock washer	P/O	=	part of	SR	=	split ring
COMP	=	composition	LOG	=	logarithmic taper	POLY	=	polystyrene	STL	=	steel
COMPL	=	complete	LPF	=	low pass filter	PORC	=	porcelain	TA	=	tantalum
CONN	=	connector	M	=	milli = 10^{-3}	POS	=	position(s)	TD	=	time delay
CP	=	cadmium plate	MEG	=	meg = 10^{6}	POT	=	potentiometer	TGL	=	toggle
CRT	=	cathode-ray tube	MET FLM	=	metal film	PP	=	peak-to-peak	THD	=	thread
CW	=	clockwise	MET OX	=	metallic oxide	PT	=	point	TI	=	titanium
DEPC	=	deposited carbon	MFR	=	manufacturer	PWV	=	peak working voltage	TOL	=	tolerance
DR	=	drive	MINAT	=	miniature	RECT	=	rectifier	TRIM	=	trimmer
ELECT	=	electrolytic	MOM	=	momentary	RF	=	radio frequency	TWT	=	traveling wave tube
ENCAP	=	encapsulated	MTG	=	mounting	RH	=	round head or right hand	U	=	micro = 10^{-6}
EXT	=	external	MY	=	"mylar"	RMO	=	rack mount only	VAR	=	variable
F	=	farads	N	=	nano (10^{-9})				VDCW	=	dc working volts
FH	=	flat head	N/C	=	normally closed				W/	=	with
FIL H	=	fillister head	NE	=	neon				W	=	watts
FXD	=	fixed	NI PL	=	nickel plate				WIV	=	working inverse voltage
GE	=	germanium	N/O	=	normally open				WW	=	wirewound
GL	=	glass	NPO	=	negative positive zero (zero temperature coefficient)				W/O	=	without
GRD	=	ground(ed)									

01194-12

Table 6-1. Reference Designation Index

Reference Designation	hp Stock No.	Description #	Note
A1	05280-6001	BOARD:DIRECTIONAL GATES & ZERO CROSSING ASSY	
A1	05280-2001	BOARD-BLANK (ZERO CROSSING)	
A1C1	0150-0121	C:FXD CER 0.1UF +80%-20% 50VDCW	
A1C2	0140-0191	C:FXD MICA 56 PF 5% 300 VDCW	
A1C3	0150-0121	C:FXD CER 0.1UF +80%-20% 50VDCW	
A1C4	0140-0191	C:FXD MICA 56 PF 5% 300 VDCW	
A1C5	0140-0191	C:FXD MICA 56 PF 5% 300 VDCW	
A1C6	0140-0191	C:FXD MICA 56 PF 5% 300 VDCW	
A1C7	0140-0191	C:FXD MICA 56 PF 5% 300 VDCW	
A1C8	0140-0191	C:FXD MICA 56 PF 5% 300 VDCW	
A1C9	0140-0194	C:FXD MICA 110 PF 5% 300 VDCW	
A1C10	0160-0356	C:FXD MICA 18PF 5%	
A1C11	0160-0356	C:FXD MICA 18PF 5%	
A1C12	0140-0204	C:FXD MICA 47PF 5% NPO 500VDCW	
A1C13	0140-0204	C:FXD MICA 47PF 5% NPO 500VDCW	
A1C14	0140-0190	C:FXD MICA 39 PF 5% 300 VDCW	
A1C15	0140-0190	C:FXD MICA 39 PF 5% 300 VDCW	
A1C16	0160-0356	C:FXD MICA 18PF 5%	
A1C17	0160-0356	C:FXD MICA 18PF 5%	
A1C18	0160-0356	C:FXD MICA 18PF 5%	
A1C19	0160-0356	C:FXD MICA 18PF 5%	
A1C20	0160-0356	C:FXD MICA 18PF 5%	
A1C21	0160-0356	C:FXD MICA 18PF 5%	
A1C22	0160-0178	C:FXD MICA 27PF 5% 300VDCW	
A1C23	0160-0178	C:FXD MICA 27PF 5% 300VDCW	
A1CR1	1910-0016	DIODE:GERMANIUM 100MA AT 0.85V 60PIV	
A1CR2	1910-0016	DIODE:GERMANIUM 100MA AT 0.85V 60PIV	
A1CR3	1910-0016	DIODE:GERMANIUM 100MA AT 0.85V 60PIV	
A1CR4	1910-0016	DIODE:GERMANIUM 100MA AT 0.85V 60PIV	
A1CR5	1910-0016	DIODE:GERMANIUM 100MA AT 0.85V 60PIV	
A1CR6	1910-0016	DIODE:GERMANIUM 100MA AT 0.85V 60PIV	
A1CR7	1910-0016	DIODE:GERMANIUM 100MA AT 0.85V 60PIV	
A1CR8	1910-0016	DIODE:GERMANIUM 100MA AT 0.85V 60PIV	
A1CR9	1910-0016	DIODE:GERMANIUM 100MA AT 0.85V 60PIV	
A1CR10	1910-0016	DIODE:GERMANIUM 100MA AT 0.85V 60PIV	
A1CR11	1910-0016	DIODE:GERMANIUM 100MA AT 0.85V 60PIV	
A1CR12	1910-0016	DIODE:GERMANIUM 100MA AT 0.85V 60PIV	
A1CR13	1910-0016	DIODE:GERMANIUM 100MA AT 0.85V 60PIV	
A1CR14	1910-0016	DIODE:GERMANIUM 100MA AT 0.85V 60PIV	
A1CR15	1910-0016	DIODE:GERMANIUM 100MA AT 0.85V 60PIV	
A1CR16	1910-0016	DIODE:GERMANIUM 100MA AT 0.85V 60PIV	
A1CR17	1910-0016	DIODE:GERMANIUM 100MA AT 0.85V 60PIV	
A1CR18	1910-0016	DIODE:GERMANIUM 100MA AT 0.85V 60PIV	
A1CR19	1910-0016	DIODE:GERMANIUM 100MA AT 0.85V 60PIV	
A1CR20	1910-0016	DIODE:GERMANIUM 100MA AT 0.85V 60PIV	
A1CR21	1910-0016	DIODE:GERMANIUM 100MA AT 0.85V 60PIV	
A1CR22	1910-0016	DIODE:GERMANIUM 100MA AT 0.85V 60PIV	
A1CR23	1910-0016	DIODE:GERMANIUM 100MA AT 0.85V 60PIV	
A1CR24	1910-0016	DIODE:GERMANIUM 100MA AT 0.85V 60PIV	

See list of abbreviations in introduction to this section

Table 6-1. Reference Designation Index (Cont'd)

Reference Designation	Stock No.	Description #	Note
A1CR25	1910-0016	DIODE:GERMANIUM 100MA AT 0.85V 60PIV	
A1CR26	1910-0016	DIODE:GERMANIUM 100MA AT 0.85V 60PIV	
A1CR27	1901-0081	DIODE:SILICON 50 VOLTS WORKING	
A1CR28	1901-0081	DIODE:SILICON 50 VOLTS WORKING	
A1Q1	1854-0005	TRANSISTOR:2N708 NPN SILICON	
A1Q2	1854-0005	TRANSISTOR:2N708 NPN SILICON	
A1Q3	1854-0005	TRANSISTOR:2N708 NPN SILICON	
A1Q4	1854-0005	TRANSISTOR:2N708 NPN SILICON	
A1Q5	1854-0005	TRANSISTOR:2N708 NPN SILICON	
A1Q6	1854-0005	TRANSISTOR:2N708 NPN SILICON	
A1Q7	1854-0005	TRANSISTOR:2N708 NPN SILICON	
A1Q8	1854-0022	TRANSISTOR:NPN SILICON	
A1Q9	1854-0022	TRANSISTOR:NPN SILICON	
A1Q10	1854-0005	TRANSISTOR:2N708 NPN SILICON	
A1Q11	1854-0005	TRANSISTOR:2N708 NPN SILICON	
A1Q12	1854-0005	TRANSISTOR:2N708 NPN SILICON	
A1Q13	1854-0005	TRANSISTOR:2N708 NPN SILICON	
A1Q14	1854-0005	TRANSISTOR:2N708 NPN SILICON	
A1Q15	1854-0005	TRANSISTOR:2N708 NPN SILICON	
A1Q16	1850-0062	TRANSISTOR:GERMANIUM PNP 2N404	
A1Q17	1854-0005	TRANSISTOR:2N708 NPN SILICON	
A1Q18	1854-0005	TRANSISTOR:2N708 NPN SILICON	
A1R1	0683-4325	R:FXD COMP 4300 OHM 5% 1/4W	
A1R2	0683-1035	R:FXD COMP 10K OHM 5% 1/4W	
A1R3	0683-4325	R:FXD COMP 4300 OHM 5% 1/4W	
A1R4	0683-1035	R:FXD COMP 10K OHM 5% 1/4W	
A1R5	0683-4325	R:FXD COMP 4300 OHM 5% 1/4W	
A1R6	0683-1035	R:FXD COMP 10K OHM 5% 1/4W	
A1R7	0683-4325	R:FXD COMP 4300 OHM 5% 1/4W	
A1R8	0683-1035	R:FXD COMP 10K OHM 5% 1/4W	
A1R9	0683-6815	R:FXD COMP 680 OHM 5% 1/4W	
A1R10	0683-6815	R:FXD COMP 680 OHM 5% 1/4W	
A1R11	0683-3625	R:FXD COMP 3600 OHM 5% 1/4W	
A1R12	0683-3625	R:FXD COMP 3600 OHM 5% 1/4W	
A1R13	0683-2025	R:FXD COMP 2000 OHM 5% 1/4W	
A1R14	0683-2025	R:FXD COMP 2000 OHM 5% 1/4W	
A1R15	0683-5125	R:FXD COMP 5100 OHM 5% 1/4W	
A1R16	0683-1525	R:FXD COMP 1500 OHM 5% 1/4W	
A1R17	0683-1525	R:FXD COMP 1500 OHM 5% 1/4W	
A1R18	0683-6825	R:FXD COMP 6800 OHM 5% 1/4W	
A1R19	0758-0032	R:FXD MET OX 820 OHM 5% 1/2W	
A1R20	0683-1015	R:FXD COMP 100 OHM 5% 1/4W	
A1R21	0758-0032	R:FXD MET OX 820 OHM 5% 1/2W	
A1R22	0683-1015	R:FXD COMP 100 OHM 5% 1/4W	
A1R23	0683-1325	R:FXD COMP 1300 OHM 5% 1/4W	
A1R24	0683-5125	R:FXD COMP 5100 OHM 5% 1/4W	
A1R25	0683-5125	R:FXD COMP 5100 OHM 5% 1/4W	
A1R26	0683-1835	R:FXD COMP 18K OHM 5% 1/4W	
A1R27	0683-1835	R:FXD COMP 18K OHM 5% 1/4W	
A1R28	0683-5125	R:FXD COMP 5100 OHM 5% 1/4W	

See list of abbreviations in introduction to this section

Table 6-1. Reference Designation Index (Cont'd)

Reference Designation	Stock No.	Description #	Note
A1R29	0683-5125	R:FXD COMP 5100 OHM 5% 1/4W	
A1R30	0683-1225	R:FXD COMP 1200 OHM 5% 1/4W	
A1R31	0683-1225	R:FXD COMP 1200 OHM 5% 1/4W	
A1R32	0683-1545	R:FXD COMP 150K OHM 5% 1/4W	
A1R33	0683-1835	R:FXD COMP 18K OHM 5% 1/4W	
A1R34	0683-4735	R:FXD COMP 47K OHM 5% 1/4W	
A1R35	0683-1345	R:FXD COMP 130K OHM 5% 1/4W	
A1R36	0683-3345	R:FXD COMP 330K OHM 5% 1/4W	
A1R37	0683-5125	R:FXD COMP 5100 OHM 5% 1/4W	
A1R38	0683-5125	R:FXD COMP 5100 OHM 5% 1/4W	
A1R39	0683-2725	R:FXD COMP 2700 OHM 5% 1/4W	
A1R40	0683-2725	R:FXD COMP 2700 OHM 5% 1/4W	
A1R41	0683-2035	R:FXD COMP 20K OHM 5% 1/4W	
A1R42	0683-2035	R:FXD COMP 20K OHM 5% 1/4W	
A1R43	0683-1025	R:FXD COMP 1000 OHM 5% 1/4W	
A1R44	0683-1025	R:FXD COMP 1000 OHM 5% 1/4W	
A1R45	0683-1835	R:FXD COMP 18K OHM 5% 1/4W	
A1R46	0683-4735	R:FXD COMP 47K OHM 5% 1/4W	
A1R47	0683-1345	R:FXD COMP 130K OHM 5% 1/4W	
A1R48	0683-3345	R:FXD COMP 330K OHM 5% 1/4W	
A1R49	0683-1545	R:FXD COMP 150K OHM 5% 1/4W	
A1R50	0683-5125	R:FXD COMP 5100 OHM 5% 1/4W	
A1R51	0683-5125	R:FXD COMP 5100 OHM 5% 1/4W	
A1R52	0683-5125	R:FXD COMP 5100 OHM 5% 1/4W	
A1R53	0683-5125	R:FXD COMP 5100 OHM 5% 1/4W	
A1R54	0683-5125	R:FXD COMP 5100 OHM 5% 1/4W	
A1R55	0683-5125	R:FXD COMP 5100 OHM 5% 1/4W	
A1R56	0683-2035	R:FXD COMP 20K OHM 5% 1/4W	
A1R57	0683-2035	R:FXD COMP 20K OHM 5% 1/4W	
A1R58	0683-1025	R:FXD COMP 1000 OHM 5% 1/4W	
A1R59	0683-1025	R:FXD COMP 1000 OHM 5% 1/4W	
A1R60	0683-2025	R:FXD COMP 2000 OHM 5% 1/4W	
A1R61	0683-2025	R:FXD COMP 2000 OHM 5% 1/4W	
A1R62	0683-4725	R:FXD COMP 4700 OHM 5% 1/4W	
A1R63	0683-4725	R:FXD COMP 4700 OHM 5% 1/4W	
A1R64	0683-2035	R:FXD COMP 20K OHM 5% 1/4W	
A1R65	0683-2735	R:FXD COMP 27K OHM 5% 1/4W	
A1R66	0683-2735	R:FXD COMP 27K OHM 5% 1/4W	
A1R67	0683-2035	R:FXD COMP 20K OHM 5% 1/4W	
A1R68	0683-1325	R:FXD COMP 1300 OHM 5% 1/4W	
A1R69	0683-1325	R:FXD COMP 1300 OHM 5% 1/4W	
A1R70	0683-1035	R:FXD COMP 10K OHM 5% 1/4W	
A1R71	0683-1045	R:FXD COMP 100K OHM 5% 1/4W	
A1R72	0758-0008	R:FXD MET OX FLM 390 OHM 5% 1/2W	
A1R73	0683-3625	R:FXD COMP 3600 OHM 5% 1/4W	
A1R74	0758-0008	R:FXD MET OX FLM 390 OHM 5% 1/2W	
A1R75	0683-3625	R:FXD COMP 3600 OHM 5% 1/4W	
A1R76	0683-1035	R:FXD COMP 10K OHM 5% 1/4W	
A2	05280-6002	BOARD:REVERSIBLE DECIMAL COUNTER ASSY	
A2	05280-2002	BOARD-BLANK (RDCA)	
	05280-6008	READOUT BLOCK ASSEMBLY	

See list of abbreviations in introduction to this section

Table 6-1. Reference Designation Index (Cont'd)

Reference Designation	Stock No.	Description #	Note
A2C1	0150-0121	C:FXD CER 0.1UF +80%-20% 50VDCW	
A2C2	0150-0121	C:FXD CER 0.1UF +80%-20% 50VDCW	
A2C3	0160-0196	C:FXD MICA 24PF 5% 300VDCW	
A2C4	0160-0196	C:FXD MICA 24PF 5% 300VDCW	
A2C5	0150-0121	C:FXD CER 0.1UF +80%-20% 50VDCW	
A2C6	0140-0204	C:FXD MICA 47PF 5% NPO 500VDCW	
A2C7	0140-0204	C:FXD MICA 47PF 5% NPO 500VDCW	
A2C8	0150-0043	C:FXD TI 6.8 PF 5% 500 VDCW	
A2C9	0150-0043	C:FXD TI 6.8 PF 5% 500 VDCW	
A2C10	0160-0196	C:FXD MICA 24PF 5% 300VDCW	
A2C11	0140-0201	C:FXD MICA 12PF 5% 500VDCW	
A2C12	0160-0196	C:FXD MICA 24PF 5% 300VDCW	
A2C13	0140-0201	C:FXD MICA 12PF 5% 500VDCW	
A2C14	0160-0196	C:FXD MICA 24PF 5% 300VDCW	
A2C15	0160-0196	C:FXD MICA 24PF 5% 300VDCW	
A2C16	0160-0196	C:FXD MICA 24PF 5% 300VDCW	
A2C17	0140-0201	C:FXD MICA 12PF 5% 500VDCW	
A2C18	0140-0203	C:FXD MICA 30PF 5% 500VDCW	
A2C19	0140-0201	C:FXD MICA 12PF 5% 500VDCW	
A2C20	0160-0196	C:FXD MICA 24PF 5% 300VDCW	
A2C21	0160-0196	C:FXD MICA 24PF 5% 300VDCW	
A2C22	0160-0196	C:FXD MICA 24PF 5% 300VDCW	
A2C23	0140-0201	C:FXD MICA 12PF 5% 500VDCW	
A2C24	0160-0196	C:FXD MICA 24PF 5% 300VDCW	
A2C25	0140-0201	C:FXD MICA 12PF 5% 500VDCW	
A2C26	0160-0196	C:FXD MICA 24PF 5% 300VDCW	
A2C27	0160-0196	C:FXD MICA 24PF 5% 300VDCW	
A2C28	0140-0203	C:FXD MICA 30PF 5% 500VDCW	
A2C29	0140-0201	C:FXD MICA 12PF 5% 500VDCW	
A2C30	0160-0196	C:FXD MICA 24PF 5% 300VDCW	
A2C31	0140-0201	C:FXD MICA 12PF 5% 500VDCW	
A2C32	0160-0196	C:FXD MICA 24PF 5% 300VDCW	
A2C33	0160-0196	C:FXD MICA 24PF 5% 300VDCW	
A2C34	0140-0201	C:FXD MICA 12PF 5% 500VDCW	
A2C35	0140-0201	C:FXD MICA 12PF 5% 500VDCW	
A2C36	0160-0178	C:FXD MICA 27PF 5% 300VDCW	
A2C37	0160-0178	C:FXD MICA 27PF 5% 300VDCW	
A2CR1	1901-0025	DIODE,JUNCTION:100 MA 100PIV	
A2CR2	1901-0025	DIODE,JUNCTION:100 MA 100PIV	
A2CR3	1901-0025	DIODE,JUNCTION:100 MA 100PIV	
A2CR4	1901-0025	DIODE,JUNCTION:100 MA 100PIV	
A2CR5	1901-0025	DIODE,JUNCTION:100 MA 100PIV	
A2CR6	1901-0025	DIODE,JUNCTION:100 MA 100PIV	
A2CR7	1901-0025	DIODE,JUNCTION:100 MA 100PIV	
A2CR8	1901-0025	DIODE,JUNCTION:100 MA 100PIV	
A2CR9	1901-0081	DIODE:SILICON 50 VOLTS WORKING	
A2CR10	1901-0081	DIODE:SILICON 50 VOLTS WORKING	
A2CR11	1901-0025	DIODE,JUNCTION:100 MA 100PIV	
A2CR12	1901-0081	DIODE:SILICON 50 VOLTS WORKING	
A2CR13	1901-0081	DIODE:SILICON 50 VOLTS WORKING	

See list of abbreviations in introduction to this section

Table 6-1. Reference Designation Index (Cont'd)

Reference Designation	Stock No.	Description #	Note
A2CR14	1901-0040	DIODE:SILICON 30 MA AT 1V 30 PIV	
A2CR15	1901-0040	DIODE:SILICON 30 MA AT 1V 30 PIV	
A2CR16	1901-0040	DIODE:SILICON 30 MA AT 1V 30 PIV	
A2CR17	1901-0040	DIODE:SILICON 30 MA AT 1V 30 PIV	
A2CR18	1901-0040	DIODE:SILICON 30 MA AT 1V 30 PIV	
A2CR19	1901-0040	DIODE:SILICON 30 MA AT 1V 30 PIV	
A2CR20	1901-0081	DIODE:SILICON 50 VOLTS WORKING	
A2CR21	1901-0081	DIODE:SILICON 50 VOLTS WORKING	
A2CR22	1901-0040	DIODE:SILICON 30 MA AT 1V 30 PIV	
A2CR23	1901-0040	DIODE:SILICON 30 MA AT 1V 30 PIV	
A2CR24	1901-0040	DIODE:SILICON 30 MA AT 1V 30 PIV	
A2CR25	1901-0040	DIODE:SILICON 30 MA AT 1V 30 PIV	
A2CR26	1901-0040	DIODE:SILICON 30 MA AT 1V 30 PIV	
A2CR27	1901-0040	DIODE:SILICON 30 MA AT 1V 30 PIV	
A2CR28	1901-0040	DIODE:SILICON 30 MA AT 1V 30 PIV	
A2CR29	1901-0040	DIODE:SILICON 30 MA AT 1V 30 PIV	
A2CR30	1901-0040	DIODE:SILICON 30 MA AT 1V 30 PIV	
A2CR31	1901-0040	DIODE:SILICON 30 MA AT 1V 30 PIV	
A2CR32	1901-0040	DIODE:SILICON 30 MA AT 1V 30 PIV	
A2CR33	1901-0040	DIODE:SILICON 30 MA AT 1V 30 PIV	
A2CR34	1901-0081	DIODE:SILICON 50 VOLTS WORKING	
A2CR35	1901-0040	DIODE:SILICON 30 MA AT 1V 30 PIV	
A2CR36	1901-0040	DIODE:SILICON 30 MA AT 1V 30 PIV	
A2CR37	1901-0040	DIODE:SILICON 30 MA AT 1V 30 PIV	
A2CR38	1901-0040	DIODE:SILICON 30 MA AT 1V 30 PIV	
A2CR39	1901-0081	DIODE:SILICON 50 VOLTS WORKING	
A2CR40	1901-0040	DIODE:SILICON 30 MA AT 1V 30 PIV	
A2CR41	1901-0040	DIODE:SILICON 30 MA AT 1V 30 PIV	
A2CR42	1901-0081	DIODE:SILICON 50 VOLTS WORKING	
A2CR43	1901-0081	DIODE:SILICON 50 VOLTS WORKING	
A2CR44	1901-0081	DIODE:SILICON 50 VOLTS WORKING	
A2CR45	1901-0081	DIODE:SILICON 50 VOLTS WORKING	
A2CR46	1901-0081	DIODE:SILICON 50 VOLTS WORKING	
A2DS1		NSR PART OF READOUT BLOCK ASSY	
A2DS2		NSR PART OF READOUT BLOCK ASSY	
A2DS3		NSR PART OF READOUT BLOCK ASSY	
A2DS4		NSR PART OF READOUT BLOCK ASSY	
A2DS5	1970-0009	ELECTRON TUBE:INDICATOR 10 DIGIT	
A2Q1	1854-0251	TRANSISTOR:SILICON NPN	
A2Q2	1854-0251	TRANSISTOR:SILICON NPN	
A2Q3	1854-0251	TRANSISTOR:SILICON NPN	
A2Q4	1854-0251	TRANSISTOR:SILICON NPN	
A2Q5	1854-0251	TRANSISTOR:SILICON NPN	
A2Q6	1854-0251	TRANSISTOR:SILICON NPN	
A2Q7	1854-0251	TRANSISTOR:SILICON NPN	
A2Q8	1854-0251	TRANSISTOR:SILICON NPN	
A2Q9	1854-0251	TRANSISTOR:SILICON NPN	
A2Q10	1854-0251	TRANSISTOR:SILICON NPN	
A2Q11	1854-0251	TRANSISTOR:SILICON NPN	
A2Q12	1854-0251	TRANSISTOR:SILICON NPN	

See list of abbreviations in introduction to this section

Table 6-1. Reference Designation Index (Cont'd)

Reference Designation	Stock No.	Description #	Note
A2Q13	1850-0158	TRANSISTOR:PNP GERMANIUM 2N2635	
A2Q14	1854-0251	TRANSISTOR:SILICON NPN	
A2Q15	1854-0251	TRANSISTOR:SILICON NPN	
A2Q16	1854-0251	TRANSISTOR:SILICON NPN	
A2Q17	1854-0251	TRANSISTOR:SILICON NPN	
A2R1	0758-0040	R:FXD MET OX 47K OHM 5% 1/2W	
A2R2		NETWORK:RESISTIVE(10 RESISTORS) NSR PART OF READOUT BLOCK ASSY	
A2R3	0683-3945	R:FXD COMP 390K OHM 5% 1/4W	
A2R4	0683-3945	R:FXD COMP 390K OHM 5% 1/4W	
A2R5	0683-3945	R:FXD COMP 390K OHM 5% 1/4W	
A2R6	0683-3945	R:FXD COMP 390K OHM 5% 1/4W	
A2R7	0683-5635	R:FXD COMP 56K OHM 5% 1/4W	
A2R8	0683-5635	R:FXD COMP 56K OHM 5% 1/4W	
A2R9	0683-5635	R:FXD COMP 56K OHM 5% 1/4W	
A2R10	0683-5635	R:FXD COMP 56K OHM 5% 1/4W	
A2R11	0683-5635	R:FXD COMP 56K OHM 5% 1/4W	
A2R12	0683-5635	R:FXD COMP 56K OHM 5% 1/4W	
A2R13	0683-5635	R:FXD COMP 56K OHM 5% 1/4W	
A2R14	0683-5635	R:FXD COMP 56K OHM 5% 1/4W	
A2R15	0683-6825	R:FXD COMP 6800 OHM 5% 1/4W	
A2R16	0683-6825	R:FXD COMP 6800 OHM 5% 1/4W	
A2R17	0683-6825	R:FXD COMP 6800 OHM 5% 1/4W	
A2R18	0683-6825	R:FXD COMP 6800 OHM 5% 1/4W	
A2R19	0683-1025	R:FXD COMP 1000 OHM 5% 1/4W	
A2R20	0683-1025	R:FXD COMP 1000 OHM 5% 1/4W	
A2R21	0683-1035	R:FXD COMP 10K OHM 5% 1/4W	
A2R22	0683-1025	R:FXD COMP 1000 OHM 5% 1/4W	
A2R23	0683-1035	R:FXD COMP 10K OHM 5% 1/4W	
A2R24	0683-1025	R:FXD COMP 1000 OHM 5% 1/4W	
A2R25	0683-6825	R:FXD COMP 6800 OHM 5% 1/4W	
A2R26	0683-6825	R:FXD COMP 6800 OHM 5% 1/4W	
A2R27	0683-1325	R:FXD COMP 1300 OHM 5% 1/4W	
A2R28	0683-1325	R:FXD COMP 1300 OHM 5% 1/4W	
A2R29	0761-0010	R:FXD MET OX 1.8K OHM 5% 1W	
A2R30	0683-1635	R:FXD COMP 16K OHM 5% 1/4W	
A2R31	0683-4325	R:FXD COMP 4300 OHM 5% 1/4W	
A2R32	0683-1045	R:FXD COMP 100K OHM 5% 1/4W	
A2R33	0761-0010	R:FXD MET OX 1.8K OHM 5% 1W	
A2R34	0683-1635	R:FXD COMP 16K OHM 5% 1/4W	
A2R35	0683-4325	R:FXD COMP 4300 OHM 5% 1/4W	
A2R36	0683-6825	R:FXD COMP 6800 OHM 5% 1/4W	
A2R37	0683-6825	R:FXD COMP 6800 OHM 5% 1/4W	
A2R38	0683-2235	R:FXD COMP 22K OHM 5% 1/4W	
A2R39	0761-0010	R:FXD MET OX 1.8K OHM 5% 1W	
A2R40	0683-1635	R:FXD COMP 16K OHM 5% 1/4W	
A2R41	0683-4325	R:FXD COMP 4300 OHM 5% 1/4W	
A2R42	0683-5625	R:FXD COMP 5600 OHM 5% 1/4W	
A2R43	0683-8235	R:FXD COMP 82K OHM 5% 1/4W	
A2R44	0683-6225	R:FXD COMP 6200 OHM 5% 1/4W	
A2R45	0761-0010	R:FXD MET OX 1.8K OHM 5% 1W	

See list of abbreviations in introduction to this section

Table 6-1. Reference Designation Index (Cont'd)

Reference Designation	Stock No.	Description #	Note
A2R46	0683-1635	R:FXD COMP 16K OHM 5% 1/4W	
A2R47	0683-4325	R:FXD COMP 4300 OHM 5% 1/4W	
A2R48	0683-2035	R:FXD COMP 20K OHM 5% 1/4W	
A2R49	0683-1035	R:FXD COMP 10K OHM 5% 1/4W	
A2R50	0683-6225	R:FXD COMP 6200 OHM 5% 1/4W	
A2R51	0683-2235	R:FXD COMP 22K OHM 5% 1/4W	
A2R52	0683-6225	R:FXD COMP 6200 OHM 5% 1/4W	
A2R53	0683-6225	R:FXD COMP 6200 OHM 5% 1/4W	
A2R54	0683-2035	R:FXD COMP 20K OHM 5% 1/4W	
A2R55	0683-5135	R:FXD COMP 51K OHM 5% 1/4W	
A2R56	0761-0010	R:FXD MET OX 1.8K OHM 5% 1W	
A2R57	0683-1635	R:FXD COMP 16K OHM 5% 1/4W	
A2R58	0683-4325	R:FXD COMP 4300 OHM 5% 1/4W	
A2R59	0683-6225	R:FXD COMP 6200 OHM 5% 1/4W	
A2R60	0683-5135	R:FXD COMP 51K OHM 5% 1/4W	
A2R61	0683-2035	R:FXD COMP 20K OHM 5% 1/4W	
A2R62	0761-0010	R:FXD MET OX 1.8K OHM 5% 1W	
A2R63	0683-1635	R:FXD COMP 16K OHM 5% 1/4W	
A2R64	0683-4325	R:FXD COMP 4300 OHM 5% 1/4W	
A2R65	0683-6225	R:FXD COMP 6200 OHM 5% 1/4W	
A2R66	0683-2235	R:FXD COMP 22K OHM 5% 1/4W	
A2R67	0683-6225	R:FXD COMP 6200 OHM 5% 1/4W	
A2R68	0683-6225	R:FXD COMP 6200 OHM 5% 1/4W	
A2R69	0683-1045	R:FXD COMP 100K OHM 5% 1/4W	
A2R70	0761-0010	R:FXD MET OX 1.8K OHM 5% 1W	
A2R71	0683-1635	R:FXD COMP 16K OHM 5% 1/4W	
A2R72	0683-4325	R:FXD COMP 4300 OHM 5% 1/4W	
A2R73	0683-5625	R:FXD COMP 5600 OHM 5% 1/4W	
A2R74	0761-0010	R:FXD MET OX 1.8K OHM 5% 1W	
A2R75	0683-1635	R:FXD COMP 16K OHM 5% 1/4W	
A2R76	0683-4325	R:FXD COMP 4300 OHM 5% 1/4W	
A2R77	0683-6225	R:FXD COMP 6200 OHM 5% 1/4W	
A2R78	0683-6225	R:FXD COMP 6200 OHM 5% 1/4W	
A2R79	0683-1015	R:FXD COMP 100 OHM 5% 1/4W	
A2R80	0683-2235	R:FXD COMP 22K OHM 5% 1/4W	
A2R81	0683-8225	R:FXD COMP 8200 OHM 5% 1/4W	
A2R82	0683-8225	R:FXD COMP 8200 OHM 5% 1/4W	
A2R83	0683-6825	R:FXD COMP 6800 OHM 5% 1/4W	
A2R84	0683-6825	R:FXD COMP 6800 OHM 5% 1/4W	
A2R85	0683-1125	R:FXD COMP 1200 OHM 5% 1/4W	
A2R86	0683-1125	R:FXD COMP 1200 OHM 5% 1/4W	
A2R87	0683-6225	R:FXD COMP 6200 OHM 5% 1/4W	
A2R88	0683-2225	R:FXD COMP 2.2K OHM 5% 1/4W	
A2R89	0683-6225	R:FXD COMP 6200 OHM 5% 1/4W	
A2R90	0683-2225	R:FXD COMP 2.2K OHM 5% 1/4W	
A2R91	0683-1325	R:FXD COMP 1300 OHM 5% 1/4W	
A2R92	0683-1325	R:FXD COMP 1300 OHM 5% 1/4W	
A2V1		NSR PART OF READOUT BLOCK ASSY	
A3		SAME AS A2 USE PREFIX A3	
A4		SAME AS A2:USE PREFIX A4	

See list of abbreviations in introduction to this section

Table 6-1. Reference Designation Index (Cont'd)

Reference Designation	Stock No.	Description #	Note
A5		SAME AS A2:USE PREFIX A5	
A6		SAME AS A2:USE PREFIX A6	
A7		SAME AS A2 USE PREFIX A7	
A8 THRU			
A9		NOT ASSIGNED	
A10	05280-6003	BOARD:GATE CONTROL ASSY	
A10	05280-2003	BOARD-BLANK CONTROL	
A10C1	0150-0121	C:FXD CER 0.1UF +80%-20% 50VDCW	
A10C2	0150-0121	C:FXD CER 0.1UF +80%-20% 50VDCW	
A10C3	0160-0196	C:FXD MICA 24PF 5% 300VDCW	
A10C4	0140-0203	C:FXD MICA 30PF 5% 500VDCW	
A10C5	0160-0938	C:FXD MICA 1000 PF 5%	
A10C6	0160-0938	C:FXD MICA 1000 PF 5%	
A10C7	0150-0121	C:FXD CER 0.1UF +80%-20% 50VDCW	
A10C8	0160-0938	C:FXD MICA 1000 PF 5%	
A10C9	0140-0234	C:FXD MICA 500PF 1% 300VDCW	
A10C10	0160-0356	C:FXD MICA 18PF 5%	
A10C11	0140-0202	C:FXD MICA 15 PF 5% 500VDCW	
A10C12	0160-0356	C:FXD MICA 18PF 5%	
A10C13	0140-0203	C:FXD MICA 30PF 5% 500VDCW	
A10C14	0160-0356	C:FXD MICA 18PF 5%	
A10C15	0140-0201	C:FXD MICA 12PF 5% 500VDCW	
A10C16	0140-0202	C:FXD MICA 15 PF 5% 500VDCW	
A10CR1	1910-0016	DIODE:GERMANIUM 100MA AT 0.85V 60PIV	
A10CR2	1910-0016	DIODE:GERMANIUM 100MA AT 0.85V 60PIV	
A10CR3	1910-0016	DIODE:GERMANIUM 100MA AT 0.85V 60PIV	
A10CR4	1910-0016	DIODE:GERMANIUM 100MA AT 0.85V 60PIV	
A10CR5	1910-0016	DIODE:GERMANIUM 100MA AT 0.85V 60PIV	
A10CR6	1910-0016	DIODE:GERMANIUM 100MA AT 0.85V 60PIV	
A10CR7	1910-0016	DIODE:GERMANIUM 100MA AT 0.85V 60PIV	
A10CR8	1910-0016	DIODE:GERMANIUM 100MA AT 0.85V 60PIV	
A10CR9	1910-0016	DIODE:GERMANIUM 100MA AT 0.85V 60PIV	
A10CR10	1910-0016	DIODE:GERMANIUM 100MA AT 0.85V 60PIV	
A10Q1	1850-0158	TRANSISTOR:PNP GERMANIUM 2N2635	
A10Q2	1854-0005	TRANSISTOR:2N708 NPN SILICON	
A10Q3	1854-0005	TRANSISTOR:2N708 NPN SILICON	
A10Q4	1854-0005	TRANSISTOR:2N708 NPN SILICON	
A10Q5	1854-0005	TRANSISTOR:2N708 NPN SILICON	
A10Q6	1850-0158	TRANSISTOR:PNP GERMANIUM 2N2635	
A10Q7	1850-0158	TRANSISTOR:PNP GERMANIUM 2N2635	
A10Q8	1854-0022	TRANSISTOR:NPN SILICON	
A10Q9	1854-0005	TRANSISTOR:2N708 NPN SILICON	
A10Q10	1854-0005	TRANSISTOR:2N708 NPN SILICON	
A10Q11	1854-0005	TRANSISTOR:2N708 NPN SILICON	
A10Q12	1854-0022	TRANSISTOR:NPN SILICON	
A10R1	0683-1535	R:FXD COMP 15K OHM 5% 1/4W	
A10R2	0683-1065	R:FXD COMP 10M OHM 5% 1/4W	
A10R3	0683-5635	R:FXD COMP 56K OHM 5% 1/4W	
A10R4	0683-2735	R:FXD COMP 27K OHM 5% 1/4W	

See list of abbreviations in introduction to this section

Table 6-1. Reference Designation Index (Cont'd)

Reference Designation	Stock No.	Description #	Note
A10R5	0683-2025	R:FXD COMP 2000 OHM 5% 1/4W	
A10R6	0683-2735	R:FXD COMP 27K OHM 5% 1/4W	
A10R7	0683-1025	R:FXD COMP 1000 OHM 5% 1/4W	
A10R8	0683-1035	R:FXD COMP 10K OHM 5% 1/4W	
A10R9	0683-4735	R:FXD COMP 47K OHM 5% 1/4W	
A10R10	0683-4735	R:FXD COMP 47K OHM 5% 1/4W	
A10R11	0683-9125	R:FXD COMP 9100 OHM 5% 1/4W	
A10R12	0683-1045	R:FXD COMP 100K OHM 5% 1/4W	
A10R13	0683-1025	R:FXD COMP 1000 OHM 5% 1/4W	
A10R14	0683-3335	R:FXD COMP 33K OHM 5% 1/4W	
A10R15	0683-1535	R:FXD COMP 15K OHM 5% 1/4W	
A10R16	0683-1025	R:FXD COMP 1000 OHM 5% 1/4W	
A10R17	0683-3325	R:FXD COMP 3300 OHM 5% 1/4W	
A10R18	0683-1045	R:FXD COMP 100K OHM 5% 1/4W	
A10R19	0683-1045	R:FXD COMP 100K OHM 5% 1/4W	
A10R20	0683-2735	R:FXD COMP 27K OHM 5% 1/4W	
A10R21	0683-1535	R:FXD COMP 15K OHM 5% 1/4W	
A10R22	0683-1045	R:FXD COMP 100K OHM 5% 1/4W	
A10R23	0683-2735	R:FXD COMP 27K OHM 5% 1/4W	
A10R24	0683-2735	R:FXD COMP 27K OHM 5% 1/4W	
A10R25	0683-6825	R:FXD COMP 6800 OHM 5% 1/4W	
A10R26	0683-1835	R:FXD COMP 18K OHM 5% 1/4W	
A10R27	0683-1025	R:FXD COMP 1000 OHM 5% 1/4W	
A10R28	0683-1045	R:FXD COMP 100K OHM 5% 1/4W	
A10R29	0683-2735	R:FXD COMP 27K OHM 5% 1/4W	
A10R30	0683-1045	R:FXD COMP 100K OHM 5% 1/4W	
A10R31	0758-0010	R:FXD MET OX FLM 3300 OHM 5% 1/2W	
A10R32	0683-2445	R:FXD COMP 240K OHM 5% 1/4W	
A10R33	0758-0010	R:FXD MET OX FLM 3300 OHM 5% 1/2W	
A10R34	0683-8205	R:FXD COMP 82 OHM 5% 1/4W	
A10R35	0683-1325	R:FXD COMP 1300 OHM 5% 1/4W	
A10R36	0683-1045	R:FXD COMP 100K OHM 5% 1/4W	
A10R37	0683-1835	R:FXD COMP 18K OHM 5% 1/4W	
A10R38	0683-2735	R:FXD COMP 27K OHM 5% 1/4W	
A10R39	0683-4735	R:FXD COMP 47K OHM 5% 1/4W	
A10R40	0683-1045	R:FXD COMP 100K OHM 5% 1/4W	
A10R41	0683-2025	R:FXD COMP 2000 OHM 5% 1/4W	
A10R42	0683-1045	R:FXD COMP 100K OHM 5% 1/4W	
A10R43	0683-2445	R:FXD COMP 240K OHM 5% 1/4W	
A10R44	0683-2225	R:FXD COMP 2.2K OHM 5% 1/4W	
A11	05280-6004	BOARD:GATE CONTROL AMPLIFIER ASSY	
A11	05280-2004	BOARD-BLANK GATE CONTROL AMP	
A11C1	0150-0121	C:FXD CER 0.1UF +80%-20% 50VDCW	
A11C2	0150-0121	C:FXD CER 0.1UF +80%-20% 50VDCW	
A11C3	0140-0209	C:FXD MICA 5PF 10% 500VDCW	
A11C4	0140-0209	C:FXD MICA 5PF 10% 500VDCW	
A11C5	0150-0121	C:FXD CER 0.1UF +80%-20% 50VDCW	
A11C6	0150-0121	C:FXD CER 0.1UF +80%-20% 50VDCW	
A11C7	0160-0196	C:FXD MICA 24PF 5% 300VDCW	
A11C8	0160-0196	C:FXD MICA 24PF 5% 300VDCW	

See list of abbreviations in introduction to this section

Table 6-1. Reference Designation Index (Cont'd)

Reference Designation	Stock No.	Description #	Note
A11CR1	1901-0081	DIODE:SILICON 50 VOLTS WORKING	
A11CR2	1901-0081	DIODE:SILICON 50 VOLTS WORKING	
A11CR3	1901-0081	DIODE:SILICON 50 VOLTS WORKING	
A11CR4	1901-0081	DIODE:SILICON 50 VOLTS WORKING	
A11CR5	1901-0081	DIODE:SILICON 50 VOLTS WORKING	
A11CR6	1901-0081	DIODE:SILICON 50 VOLTS WORKING	
A11J9	1251-0087	CONNECTOR:FEMALE 50-PIN MINAT	
A11Q1	1853-0009	TRANSISTOR:SILICON PNP	
A11Q2	1853-0009	TRANSISTOR:SILICON PNP	
A11Q3	1854-0005	TRANSISTOR:2N708 NPN SILICON	
A11Q4	1854-0005	TRANSISTOR:2N708 NPN SILICON	
A11Q5	1850-0158	TRANSISTOR:PNP GERMANIUM 2N2635	
A11Q6	1850-0158	TRANSISTOR:PNP GERMANIUM 2N2635	
A11Q7	1850-0158	TRANSISTOR:PNP GERMANIUM 2N2635	
A11Q8	1850-0158	TRANSISTOR:PNP GERMANIUM 2N2635	
A11R1	0683-1045	R:FXD COMP 100K OHM 5% 1/4W	
A11R2	0683-1045	R:FXD COMP 100K OHM 5% 1/4W	
A11R3	0683-1045	R:FXD COMP 100K OHM 5% 1/4W	
A11R4	0683-1045	R:FXD COMP 100K OHM 5% 1/4W	
A11R5	0683-3355	R:FXD COMP 3.3 MEGOHM 5% 1/4W	
A11R6	0683-1535	R:FXD COMP 15K OHM 5% 1/4W	
A11R7	0683-3355	R:FXD COMP 3.3 MEGOHM 5% 1/4W	
A11R8	0683-1535	R:FXD COMP 15K OHM 5% 1/4W	
A11R9	0683-1525	R:FXD COMP 1500 OHM 5% 1/4W	
A11R10	0683-1525	R:FXD COMP 1500 OHM 5% 1/4W	
A11R11	0683-1035	R:FXD COMP 10K OHM 5% 1/4W	
A11R12	0683-1035	R:FXD COMP 10K OHM 5% 1/4W	
A11R13	0683-3325	R:FXD COMP 3300 OHM 5% 1/4W	
A11R14	0683-1025	R:FXD COMP 1000 OHM 5% 1/4W	
A11R15	0683-3325	R:FXD COMP 3300 OHM 5% 1/4W	
A11R16	0683-1025	R:FXD COMP 1000 OHM 5% 1/4W	
A11R17	0683-2235	R:FXD COMP 22K OHM 5% 1/4W	
A11R18	0683-2235	R:FXD COMP 22K OHM 5% 1/4W	
A11R19	0683-4735	R:FXD COMP 47K OHM 5% 1/4W	
A11R20	0683-4735	R:FXD COMP 47K OHM 5% 1/4W	
A11R21	0683-1825	R:FXD COMP 1800 OHM 5% 1/4W	
A11R22	0683-1825	R:FXD COMP 1800 OHM 5% 1/4W	
A11R23	0683-1015	R:FXD COMP 100 OHM 5% 1/4W	
A11R24	0683-1015	R:FXD COMP 100 OHM 5% 1/4W	
A12	5243A-65L	BOARD:RECTIFIER ASSY	
A12	5243A-65L-1	BOARD:BLANK P.C.	
A12C1	0170-0040	C:FXD MY .047 UF 10% 200VDCW	
A12C2	0160-0314	C:FXD MY 0.01 UF 5% 400VDCW	
A12C3	0160-0314	C:FXD MY 0.01 UF 5% 400VDCW	
A12C4	0170-0040	C:FXD MY .047 UF 10% 200VDCW	
A12CR1	1901-0045	SEMICON DEVICE:DIODE SI	
A12CR2	1901-0045	SEMICON DEVICE:DIODE SI	
A12CR3	1901-0045	SEMICON DEVICE:DIODE SI	

See list of abbreviations in introduction to this section

Table 6-1. Reference Designation Index (Cont'd)

Reference Designation	Stock No.	Description #	Note
A12CR4	1901-0045	SEMICON DEVICE:DIODE SI	
A12CR5	1901-0045	SEMICON DEVICE:DIODE SI	
A12CR6	1901-0045	SEMICON DEVICE:DIODE SI	
A12CR7	1901-0029	SEMICON DEVICE:DIODE SI 600V	
A12CR8	1901-0029	SEMICON DEVICE:DIODE SI 600V	
A12CR9	1901-0045	SEMICON DEVICE:DIODE SI	
A12CR10	1901-0045	SEMICON DEVICE:DIODE SI	
A12CR11	1901-0045	SEMICON DEVICE:DIODE SI	
A12CR12	1901-0045	SEMICON DEVICE:DIODE SI	
A12CR13	1901-0049	SEMICON DEVICE:DIODE SI	
A12CR14	1901-0049	SEMICON DEVICE:DIODE SI	
A12CR15	1901-0049	SEMICON DEVICE:DIODE SI	
A12CR16	1901-0049	SEMICON DEVICE:DIODE SI	
A13	5243A-65H	BOARD:REGULATOR ASSY	
A13	5243A-65H-1	BOARD:BLANK P.C.	
A13C1	0170-0040	C:FXD MY .047 UF 10% 200VDCW	
A13C2	0180-0058	C:FXD ELECT 50UF -10%+100% 25VDCW	
A13C3	0170-0040	C:FXD MY .047 UF 10% 200VDCW	
A13C4	0180-0098	C:FXD ELECT 100UF 20% 20VDCW	
A13C5	0180-0098	C:FXD ELECT 100UF 20% 20VDCW	
A13CR1	1902-0017	SEMICON DEVICE:DIODE SI	
A13CR2	1902-0214	DIODE:SILICON BREAKDOWN 56.2V 10% 1/5W	
A13CR3	1902-0017	SEMICON DEVICE:DIODE SI	
A13CR4	1902-0057	SEMICON DEVICE:DIODE SILICON	
A13Q1	1853-0001	TRANSISTOR:PNP SILICON 30V 900MW	
A13Q2	1850-0062	TRANSISTOR:GERMANIUM	
A13Q3	1853-0001	TRANSISTOR:PNP SILICON 30V 900MW	
A13Q4	1850-0062	TRANSISTOR:GERMANIUM	
A13Q5	1850-0048	TRANSISTOR:GERMANIUM 2N650 PNP	
A13R1	0758-0015	R:FXD MET FLM 220 OHMS 5% 1/2W	
A13R2	0686-1025	R:FXD COMP 1000 OHM 5% 1/2W	
A13R3	0686-2235	R:FXD COMP 22K OHM 5% 1/2W	
A13R4	0758-0015	R:FXD MET FLM 220 OHMS 5% 1/2W	
A13R5	2100-1412	R:VAR COMP 500 OHM 20% LIN 1/4W	
A13R6	0758-0015	R:FXD MET FLM 220 OHMS 5% 1/2W	
A13R7	0689-2035	R:FXD COMP 20K OHM 5% 1W	
A13R8	0758-0015	R:FXD MET FLM 220 OHMS 5% 1/2W	
A13R9	0686-8215	R:FXD COMP 820 OHM 5% 1/2W	
A13R10	0686-7525	R:FXD COMP 7500 OHM 5% 1/2W	
A13R11	0758-0015	R:FXD MET FLM 220 OHMS 5% 1/2W	
A13R12	2100-1412	R:VAR COMP 500 OHM 20% LIN 1/4W	
A13R13	0758-0028	R:FXD MET FLM 270 OHMS 5% 1/2W	
A13R14	0686-8215	R:FXD COMP 820 OHM 5% 1/2W	
A13R15	0686-2735	R:FXD COMP 27K OHM 5% 1/2W	
A13R16	0686-6215	R:FXD COMP 620 OHM 5% 1/2W	
A13R17	2100-1412	R:VAR COMP 500 OHM 20% LIN 1/4W	
A13R18	0686-1225	R:FXD COMP 1200 OHM 5% 1/2W	
A13R19	0686-3625	R:FXD COMP 3600 OHM 5% 1/2W	
A13R20	0683-3615	R:FXD COMP 360 OHM 5% 1/4W	
A1	1251-0159	CONNECTOR:2X15 CONTACT	

= See list of abbreviations in introduction to this section

Table 6-1. Reference Designation Index (Cont'd)

Reference Designation	Stock No.	Description #	Note
A2	1251-0159	CONNECTOR:2X15 CONTACT	
A3	1251-0159	CONNECTOR:2X15 CONTACT	
A4	1251-0159	CONNECTOR:2X15 CONTACT	
A5	1251-0159	CONNECTOR:2X15 CONTACT	
A6	1251-0159	CONNECTOR:2X15 CONTACT	
A7	1251-0159	CONNECTOR:2X15 CONTACT	
A8 THRU			
A9		NOT ASSIGNED	
A10	1251-0159	CONNECTOR:2X15 CONTACT	
A11	1251-0135	CONNECTOR:PRINTED CIRCUIT 15 CONTACTS	
A12	1251-0159	CONNECTOR:2X15 CONTACT	
A13	1251-0135	CONNECTOR:PRINTED CIRCUIT 15 CONTACTS	
B1	3140-0052	MOTOR:ELECTRICAL SHADED POLE 115V 3470 RPM	
B1	3150-0037	FILTER:AIR	
B1	3160-0034	FAN:IMPELLER AXIAL 4 IN DIAM	
B1	5243A-20A	HOUSING-FAN	
C1	0150-0119	C:FXD CER 2 X 0.01 UF 20% 250VACW	
C2	0180-0107	C:FXD ELECT 20UF -10/+100% 200VDCW	
C2	1520-0003	PLATE:MOUNTING	
C3	0180-0107	C:FXD ELECT 20UF -10/+100% 200VDCW	
C3	1520-0003	PLATE:MOUNTING	
C4	0180-0129	C:FXD ELECT 975UF -10+50% 40VDCW	
C4	1520-0001	PLATE:MOUNTING ELECTROLYTIC CAPACITOR	
C5	0180-0129	C:FXD ELECT 975UF -10+50% 40VDCW	
C5	1520-0001	PLATE:MOUNTING ELECTROLYTIC CAPACITOR	
C6	0180-0130	C:FXD ELECT 1500UF -10+50% 15VDCW	
C6	1520-0001	PLATE:MOUNTING ELECTROLYTIC CAPACITOR	
DS1	1450-0049	INDICATOR:GLOW-LAMP NEON	
DS2	1450-0049	INDICATOR:GLOW-LAMP NEON	
DS3	1970-0012	ELECTRON TUBE:INDICATOR GAS+ AND - SYMBOLS	
F1	1400-0084	HOLDER:FUSE POST TYPE 3AG	
F1	2110-0005	FUSE:CARTRIDGE 1.6 AMP 125V	
F1	2110-0020	FUSE:CARTRIDGE 0.8 AMP SLOW BLOW	
J1	1251-0099	CONNECTOR:50 PIN MINAT PART OF CABLE ASSY- INPUT + MARKER	
J2	1250-0083	CONNECTOR:BNC INPUT A	
J3	1250-0083	CONNECTOR:BNC INPUT B	
J4	1250-0083	CONNECTOR:BNC MONITOR A	
J5	1250-0083	CONNECTOR:BNC MONITOR B	
J6	1250-0083	CONNECTOR:BNC START	
J7	1250-0083	CONNECTOR:BNC STOP	
J8	1250-0083	CONNECTOR:BNC RESET	
J9	1251-0087	CONNECTOR:50 PIN PART OF CABLE ASSY MAIN	

See list of abbreviations in introduction to this section

Table 6-1. Reference Designation Index (Cont'd)

Reference Designation	Stock No.	Description #	Note
L1	9140-0136	COIL:FXD RF 22 UH	
L2	9140-0136	COIL:FXD RF 22 UH 10%	
L3	9110-0051	INDUCTOR:A.F.	
L4	9110-0051	INDUCTOR:A.F.	
MP1	0510-0050	FASTENER RECEPTACLE:1/4 TURN TYPE	
MP1	0510-0050	FASTENER RECEPTACLE:1/4 TURN TYPE	
MP1	0510-0050	FASTENER RECEPTACLE:1/4 TURN TYPE	
MP1	0510-0050	FASTENER RECEPTACLE:1/4 TURN TYPE	
MP2	0510-0123	FASTENER:PUSH-ON TYPE	
MP2	0510-0123	FASTENER:PUSH-ON TYPE	
MP3	0510-0147	STUD ASSEMBLY:1/4 TURN FLUSH TYPE	
MP3	0510-0147	STUD ASSEMBLY:1/4 TURN FLUSH TYPE	
MP3	0510-0147	STUD ASSEMBLY:1/4 TURN FLUSH TYPE	
MP3	0510-0147	STUD ASSEMBLY:1/4 TURN FLUSH TYPE	
MP4	5040-0170	SUPPORT: PRINTED CIRCUIT BOARD	
MP5	5212A-41B	COVER-PLATE	
MP5	5212A-41B	COVER-PLATE	
MP5	5212A-41B	COVER-PLATE	
MP6	5212L-83A	SUPPORT-READOUT PLASTIC	
MP7	5212L-83B	READOUT- BLOCK	
MP8	5212L-83C	READOUT- BLOCK HOLDER	
MP8	5212L-83C	READOUT- BLOCK HOLDER	
MP9	5243A-47C	SUPPORT-PANEL	
MP10	5243L-17A	BUSHING- LATCH	
MP11	5243L-83A	HOLDER- DECIMAL	
MP12	5243L-83B	WINDOW:READOUT CLEAR	
MP13	5243L-83C	INSERT- UNITS READOUT	
MP14	5243L-91A	SPRING-LATCH	
MP15	5243L-99A	WINDOW:READOUT POLARIZED	
MP16	5243L-107A	BAR-READOUT	
MP17	05243-0007	RETAINER-LATCH	
MP18	05243-0008	RETAINER-FRONT PANEL	
MP19	05243-2013	PAWL	
MP20	05243-2014	SHAFT-LATCH	
MP21	05243-2015	KNOB	
MP22	05243-2018	HOUSING-PLUG-IN	
MP23	05280-0004	PLATE-CASTING	
MP24	05280-0005	HOLDER-PLUS + MINUS	
MP25	05280-2005	GUIDE BOARD- REAR	
MP26	05280-2006	GUIDE BOARD:FRONT	
Q1		NOT ASSIGNED	
Q2	1850-0038	TRANSISTOR:PNP GERMANIUM	
Q2	1200-0043	INSULATOR:TRANSISTOR MTG.	
Q2	1200-0081	BUSHING:INSULATOR NYLON	
Q2	1200-0081	BUSHING:INSULATOR NYLON	
Q3	1850-0038	TRANSISTOR:PNP GERMANIUM	
Q3	1200-0043	INSULATOR:TRANSISTOR MTG.	
Q3	1200-0081	BUSHING:INSULATOR NYLON	
Q3	1200-0081	BUSHING:INSULATOR NYLON	
Q4	1850-0038	TRANSISTOR:PNP GERMANIUM	
Q4	1200-0043	INSULATOR:TRANSISTOR MTG.	
Q4	1200-0081	BUSHING:INSULATOR NYLON	

See list of abbreviations in introduction to this section

Table 6-1. Reference Designation Index (Cont'd)

Reference Designation	hp Stock No.	Description #	Note
Q4	1200-0081	BUSHING:INSULATOR NYLON	
R1	2100-0167	R:VAR COMP 10K OHM 30% LIN 1/2W	
R2	2100-0167	R:VAR COMP 10K OHM 30% LIN 1/2W	
R3	0686-1045	R:FXD COMP 100K OHM 5% 1/2W	
R4	0686-1045	R:FXD COMP 100K OHM 5% 1/2W	
S1	3100-1850	SWITCH:ROTARY	
S1	0370-0077	KNOB:BLK BAR W/ARROW 5/8" DIA	
S2	3101-0051	SWITCH:PUSHBUTTON DPDT MOMENTARY	
S3	3101-0038	SWITCH:TOG DPDT 3 AMP 125 V	
S4	3101-0036	SWITCH:TOG SPST 3 AMP 250 V	
S5	3101-0033	SWITCH:SLIDE DPDT	
T1	9100-1730	TRANSFORMER	
T1	05280-2008	BRACKET- TRANS.	
T1	05280-2008	BRACKET:TRANS.	
W1	8120-0078	CABLE:POWER 7.5FT.	
		MISCELLANEOUS	
	05280-6005	CABLE ASSY.-MAIN INCLUDES J9 DIGITAL RECORDER INPUT AND MARKER	
	05280-6006	CABLE ASSY- INCLUDES J1 PLUG-IN JACK	
	10503-6001	CABLE:SYNC (TWO)	

See list of abbreviations in introduction to this section

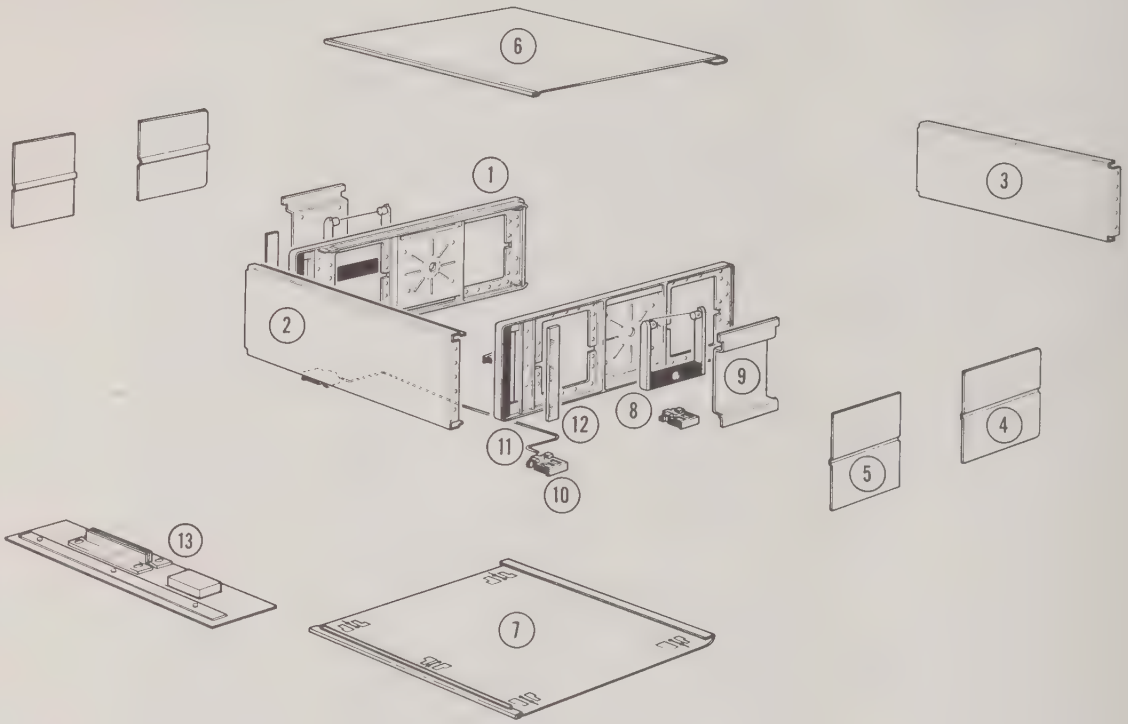

Item No.	Description	Part Number
1	Frame Assembly	5060-0732
2	Front Panel	05280-2007
3	Rear Panel	05280-0007
4	Cover: rear side, perforated	5000-0738
5	Cover: front side, perforated	5000-0739
6	Cover Assembly: top	5243A-1C
7	Cover Assembly: bottom	5243A-1B
8	Handle Assembly: side	5060-0763
9	Handle Assembly: retainer	5060-0766
10	Foot Assembly	5060-0767
11	Stand: tilt	1490-0030
12	Plate: fluted	5000-0051
13	Kit: rack mounting	05280-6007

Figure 6-1. Modular Cabinet Parts

Table 6-2. Replaceable Parts (Cont'd)

Stock No.	Description #	Mfr.	Mfr. Part No.	TQ
0140-0190	C:FXD MICA 39 PF 5% 300 VDCW	04062	RDM15E390J3C	2
0140-0191	C:FXD MICA 56 PF 5% 300 VDCW	04062	RDM15E560J3C	6
0140-0194	C:FXD MICA 110 PF 5% 300 VDCW	04062	RDM15F111J3C	1
0140-0201	C:FXD MICA 12PF 5% 500VDCW	04062	RDM15C120J5C	61
0140-0202	C:FXD MICA 15 PF 5% 500VDCW	28480	0140-0202	2
0140-0203	C:FXD MICA 30PF 5% 500VDCW	04062	DM15E300J 500V	14
0140-0204	C:FXD MICA 47PF 5% NPO 500VDCW	04062	RDM15E470J5C	14
0140-0209	C:FXD MICA 5PF 10% 500VDCW	04062	RDM15C050D5C	2
0140-0234	C:FXD MICA 500PF 1% 300VDCW	04062	RDM15F501F3C	1
0150-0043	C:FXD TI 6.8 PF 5% 500 VDCW	78488	YP GA	12
0150-0119	C:FXD CER 2 X 0.01 UF 20% 250VACW	56289	36C219A	1
0150-0121	C:FXD CER 0.1UF +80%-20% 50VDCW	56289	5C50A	27
0160-0178	C:FXD MICA 27PF 5% 300VDCW	04062	RDM15E270J3S	14
0160-0196	C:FXD MICA 24PF 5% 300VDCW	04062	RDM15C240J3S	99
0160-0314	C:FXD MY 0.01 UF 5% 400VDCW	84411	TYPE 663UW	2
0160-0356	C:FXD MICA 18PF 5%	28480	0160-0356	11
0160-0938	C:FXD MICA 1000 PF 5%	28480	0160-0938	3
0170-0040	C:FXD MY .047 UF 10% 200VDCW	28480	0170-0040	4
0180-0058	C:FXD ELECT 50UF -10%+100% 25VDCW	56289	TYPE 30D186A1	1
0180-0098	C:FXD ELECT 100UF 20% 20VDCW	56289	150D107X0020S2	2
0180-0107	C:FXD ELECT 20UF -10/+100% 200VDCW	56289	D34154	2
0180-0129	C:FXD ELECT 975UF -10+50% 40VDCW	56289	D35782	2
0180-0130	C:FXD ELECT 1500UF -10+50% 15VDCW	00853	PLI-505-1007-02	1
0370-0077	KNOB:BLK BAR W/ARROW 5/8 IN DIA	28480	0370-0077	1
0510-0050	FASTENER RECEPTACLE:1/4 TURN TYPE	71286	212-12N	4
0510-0123	FASTENER:PUSH-ON TYPE	78553	C12008-014-4	2
0510-0147	STUD ASSEMBLY:1/4 TURN FLUSH TYPE	71286	2700-4	4
0683-1015	R:FXD COMP 100 OHM 5% 1/4W	01121	CB 1015	10
0683-1025	R:FXD COMP 1000 OHM 5% 1/4W	01121	CB 1025	34
0683-1035	R:FXD COMP 10K OHM 5% 1/4W	01121	CB 1035	27
0683-1045	R:FXD COMP 100K OHM 5% 1/4W	01121	CB 1045	26
0683-1065	R:FXD COMP 10M OHM 5% 1/4W	01121	CB 1065	1
0683-1125	R:FXD COMP 1200 OHM 5% 1/4W	01121	CB1125	12
0683-1225	R:FXD COMP 1200 OHM 5% 1/4W	01121	CB 1225	2
0683-1325	R:FXD COMP 1300 OHM 5% 1/4W	01121	CB 1325	28
0683-1345	R:FXD COMP 130K OHM 5% 1/4W	01121	CB 1345	2
0683-1525	R:FXD COMP 1500 OHM 5% 1/4W	01121	CB 1525	4
0683-1535	R:FXD COMP 15K OHM 5% 1/4W	01121	CB 1535	5
0683-1545	R:FXD COMP 150K OHM 5% 1/4W	01121	CB 1545	2
0683-1635	R:FXD COMP 16K OHM 5% 1/4W	01121	CB 1635	48
0683-1825	R:FXD COMP 1800 OHM 5% 1/4W	01121	CB 1825	2
0683-1835	R:FXD COMP 18K OHM 5% 1/4W	01121	CB 1835	6
0683-2025	R:FXD COMP 2000 OHM 5% 1/4W	01121	CB 2025	6
0683-2035	R:FXD COMP 20K OHM 5% 1/4W	01121	CB 2035	24
0683-2225	R:FXD COMP 2.2K OHM 5% 1/4W	01121	GB 2225	13
0683-2235	R:FXD COMP 22K OHM 5% 1/4W	01121	CB 2235	26
0683-2445	R:FXD COMP 240K OHM 5% 1/4W	01121	CB 2445	2
0683-2725	R:FXD COMP 2700 OHM 5% 1/4W	01121	CB-2725	2
0683-2735	R:FXD COMP 27K OHM 5% 1/4W	01121	CB 2735	9

See list of abbreviations in introduction to this section

Table 6-2. Replaceable Parts (Cont'd)

Stock No.	Description #	Mfr.	Mfr. Part No.	TQ
0683-3325	R:FXD COMP 3300 OHM 5% 1/4W	01121	CB 3325	3
0683-3335	R:FXD COMP 33K OHM 5% 1/4W	01121	CB 3335	1
0683-3345	R:FXD COMP 330K OHM 5% 1/4W	01121	CB 3345	2
0683-3355	R:FXD COMP 3.3 MEGOHM 5% 1/4W	01121	CB 3355	2
0683-3615	R:FXD COMP 360 OHM 5% 1/4W	01121	CB 3615	1
0683-3625	R:FXD COMP 3600 OHM 5% 1/4W	01121	CB 3625	4
0683-3945	R:FXD COMP 390K OHM 5% 1/4W	01121	CB 3945	24
0683-4325	R:FXD COMP 4300 OHM 5% 1/4W	01121	CB 4325	52
0683-4725	R:FXD COMP 4700 OHM 5% 1/4W	01121	CB 4725	2
0683-4735	R:FXD COMP 47K OHM 5% 1/4W	01121	CB 4735	7
0683-5125	R:FXD COMP 5100 OHM 5% 1/4W	01121	CB 5125	13
0683-5135	R:FXD COMP 51K OHM 5% 1/4W	01121	CB 5135	12
0683-5625	R:FXD COMP 5600 OHM 5% 1/4W	01121	CB 5625	12
0683-5635	R:FXD COMP 56K OHM 5% 1/4W	01121	CB 5635	49
0683-6225	R:FXD COMP 6200 OHM 5% 1/4W	01121	CB 6225	72
0683-6815	R:FXD COMP 680 OHM 5% 1/4W	01121	CB 6815	2
0683-6825	R:FXD COMP 6800 OHM 5% 1/4W	01121	CB 6825	62
0683-8205	R:FXD COMP 82 OHM 5% 1/4W	01121	CB 8205	1
0683-8225	R:FXD COMP 8200 OHM 5% 1/4W	01121	CB 8225	12
0683-8235	R:FXD COMP 82K OHM 5% 1/4W	01121	EB 8235	6
0683-9125	R:FXD COMP 9100 OHM 5% 1/4W	01121	CB 9125	1
0686-1025	R:FXD COMP 1000 OHM 5% 1/2W	01121	EB 1025	1
0686-1045	R:FXD COMP 100K OHM 5% 1/2W	01121	EB 1045	2
0686-1225	R:FXD COMP 1200 OHM 5% 1/2W	01121	EB 1225	1
0686-2235	R:FXD COMP 22K OHM 5% 1/2W	01121	EB 2235	1
0686-2735	R:FXD COMP 27K OHM 5% 1/2W	01121	EB 2735	1
0686-3625	R:FXD COMP 3600 OHM 5% 1/2W	01121	EB 3625	1
0686-6215	R:FXD COMP 620 OHM 5% 1/2W	01121	EB 6215	1
0686-7525	R:FXD COMP 7500 OHM 5% 1/2W	01121	EB 7525	1
0686-8215	R:FXD COMP 820 OHM 5% 1/2W	01121	EB 8215	2
0689 2035	R:FXD COMP 20K OHM 5% 1W	01121	GB 2035	1
0758-0008	R:FXD MET OX FLM 390 OHM 5% 1/2W	28480	0758-0008	2
0758-0010	R:FXD MET OX FLM 3300 OHM 5% 1/2W	28480	0758-0010	2
0758-0015	R:FXD MET FLM 220 OHMS 5% 1/2W	07115	C 20	5
0758-0028	R:FXD MET FLM 270 OHMS 5% 1/2W	07115	C 20	1
0758-0032	R:FXD MET OX 820 OHM 5% 1/2W	28480	0758-0032	2
0758-0040	R:FXD MET OX 47K OHM 5% 1/2W	28480	0758-0040	6
0761-0010	R:FXD MET OX 1.8K OHM 5% 1W	28480	0761-0010	48
1200-0043	INSULATOR:TRANSISTOR MTG.	71785	293011	3
1200-0081	BUSHING:INSULATOR NYLON	26365	974SPECIAL	6
1250-0083	CONNECTOR:BNC	28480	1250-0083	7
1251-0087	CONNECTOR:FEMALE 50-PIN MINAT	28480	1251-0087	1
1251-0099	CONNECTOR:50 PIN MINAT	28480	1251-0099	1
1251-0135	CONNECTOR:PRINTED CIRCUIT 15 CONTACTS	95354	SD-615UR	2
1251-0159	CONNECTOR:2X15 CONTACT	28480	1251-0159	9
1400-0084	HOLDER:FUSE POST TYPE 3AG	75915	342014	1
1450-0049	INDICATOR:GLOW-LAMP NEON	28480	1450-0049	2
1520-0001	PLATE:MOUNTING ELECTROLYTIC CAPACITOR	28480	1520-0001	3
1520-0003	PLATE:MOUNTING	90201	BP2	2

See list of abbreviations in introduction to this section

Table 6-2. Replaceable Parts (Cont'd)

hp Stock No.	Description #	Mfr.	Mfr. Part No.	TQ
1850-0038	TRANSISTOR:PNP GERMANIUM	86684	1850-0038	3
1850-0048	TRANSISTOR:GERMANIUM 2N650 PNP	04713	2N650	1
1850-0062	TRANSISTOR:GERMANIUM PNP 2N404	28480	1850-0062	3
1850-0158	TRANSISTOR:PNP GERMANIUM 2N2635	01295	2N2635	13
1853-0001	TRANSISTOR:PNP SILICON 30V 900MW	28480	1853-0001	2
1853-0009	TRANSISTOR:SILICON PNP	28480	1853-0009	2
1854-0005	TRANSISTOR:2N708 NPN SILICON	07263	2N708	24
1854-0022	TRANSISTOR:NPN SILICON	28480	1854-0022	4
1854-0251	TRANSISTOR:SILICON NPN	07263	2N708	96
1901-0025	DIODE:JUNCTION:100 MA 100PIV	28480	1901-0025	54
1901-0029	SEMICON DEVICE:DIODE SI 600V	28480	1901-0029	2
1901-0040	DIODE:SILICON 30 MA AT 1V 30 PIV	28480	1901-0040	144
1901-0045	SEMICON DEVICE:DIODE SI	14099	SA-788	10
1901-0049	SEMICON DEVICE:DIODE SI	14099	SC-05	4
1901-0081	DIODE:SILICON 50 VOLTS WORKING	28480	1901-0081	86
1902-0017	SEMICON DEVICE:DIODE SI	28480	1902-0017	2
1902-0057	SEMICON DEVICE:DIODE SILICON	28480	1902-0057	1
1902-0214	DIODE:SILICON BREAKDOWN 56.2V 10% 1 5W	28480	1902-0214	1
1910-0016	DIODE:GERMANIUM 100MA AT 0.85V 60PIV	28480	1910-0016	36
1970-0009	ELECTRON TUBE:INDICATOR 10 DIGIT	83594	B5991	6
1970-0012	ELECTRON TUBE:INDICATOR GAS+ AND - SYMBOLS	28480	1970-0012	1
2100-0167	R:VAR COMP 10K OHM 30% LIN 1/2W	28480	2100-0167	2
2100-1412	R:VAR COMP 500 OHM 20% LIN 1/4W	28480	2100-1412	3
2110-0005	FUSE:CARTRIDGE 1.6 AMP 125V	71400	MDL 1.6	1
2110-0020	FUSE:CARTRIDGE 0.8 AMP SLOW BLOW	75915	313.800	1
3100-1850	SWITCH:ROTARY	28480	3100-1850	1
3101-0033	SWITCH:SLIDE DPDT	42190	4633	1
3101-0036	SWITCH:TOG SPST 3 AMP 250 V	88140	8280K16	1
3101-0038	SWITCH:TOG DPDT 3 AMP 125 V	04009	83054-B	1
3101-0051	SWITCH:PUSHBUTTON DPDT MOMENTARY	82389	3S-1431 LESS HDWE	1
3140-0052	MOTOR:ELECTRICAL SHADED POLE 115V 3470 RPM	28480	3140-0052	1
3150-0037	FILTER:AIR	28480	3150-0037	1
3160-0034	FAN:IMPELLER AXIAL 4 IN DIAM	04870	4LF 182 B	1
5040-0170	SUPPORT: PRINTED CIRCUIT BOARD	28480	5040-0170	1
8120-0078	CABLE:POWER 7.5FT.	70903	KH4147	1
9100-1730	TRANSFORMER	28480	9100-1730	1
9110-0051	INDUCTOR:A.F.	28480	9110-0051	2
9140-0136	COIL:FXD RF 22 UH	28480	9140-0136	2
05243-0007	RETAINER-LATCH	28480	05243-0007	1
05243-0008	RETAINER-FRONT PANEL	28480	05243-0008	1
05243-2013	PAWL	28480	05243-2013	1
05243-2014	SHAFT-LATCH	28480	05243-2014	1
05243-2015	KNOB	28480	05243-2015	1
05243-2018	HOUSING-PLUG-IN	28480	05243-2018	1
05280-0004	PLATE-CASTING	28480	05280-0004	1
05280-0005	HOLDER-PLUS + MINUS	28480	05280-0005	1
05280-2001	BOARD-BLANK (ZERO CROSSING)	28480	05280-2001	1
05280-2002	BOARD-BLANK (RDCA)	28480	05280-2002	6
05280-2003	BOARD-BLANK CONTROL	28480	05280-2003	1
05280-2004	BOARD-BLANK GATE CONTROL AMP	28480	05280-2004	1

See list of abbreviations in introduction to this section

Table 6-2. Replaceable Parts (Cont'd)

hp Stock No.	Description #	Mfr.	Mfr. Part No.	TQ
05280-2005	GUIDE BOARD- REAR	28480	05280-2005	1
05280-2006	GUIDE BOARD-FRONT	28480	05280-2006	1
05280-2008	BRACKET- TRANS.	28480	05280-2008	2
05280-6001	BOARD:DIRECTIONAL GATES & ZERO CROSSING	28480	05280-6001	1
05280-6002	BOARD:REVERSIBLE DECIMAL COUNTER ASSY	28480	05280-6002	6
05280-6003	BOARD:GATE CONTROL ASSY	28480	05280-6003	1
05280-6004	BOARD:GATE CONTROL AMPLIFIER ASSY	28480	05280-6004	1
05280-6005	CABLE ASSY.-MAIN	28480	05280-6005	1
05280-6006	CABLE ASSY-	28480	05280-6006	1
05280-6008	READOUT BLOCK ASSY	28480	05280-6008	6
5212A-41B	COVER-PLATE	28480	5212A-41B	3
5212L-83A	SUPPORT-READOUT PLASTIC	28480	5212L-83A	1
5212L-83B	READOUT- BLOCK	28480	5212L-83B	1
5212L-83C	READOUT- BLOCK HOLDER	28480	5212L-83C	2
5243L-107A	BAR-READOUT	28480	5243L-107A	1
5243L-17A	BUSHING- LATCH	28480	5243L-17A	1
5243A-20A	HOUSING-FAN	28480	5243A-20A	1
5243A-47C	SUPPORT-PANEL	28480	5243A-47C	1
5243A-65H	BOARD:REGULATOR ASSY	28480	5243A-65H	1
5243A-65H-1	BOARD:BLANK P.C.	28480	5243A-65H-1	1
5243A-65L	BOARD:RECTIFIER ASSY	28480	5243A-65L	1
5243A-65L-1	BOARD:BLANK P.C.	28480	5243A-65L-1	1
5243L-83A	HOLDER- DECIMAL	28480	5243L-83A	1
5243L-83B	WINDOW:READOUT CLEAR	28480	5243L-83B	1
5243L-83C	INSERT- UNITS READOUT	28480	5243L-83C	1
5243L-91A	SPRING-LATCH	28480	5243L-91A	1
5243L-99A	WINDOW:READOUT POLARIZED	28480	5243L-99A	1
10503-6001	CABLE:SYNC	28480	10503-6001	1

See list of abbreviations in introduction to this section

Table 6-3. Code List of Manufacturers

The following code numbers are from the Federal Supply Code for Manufacturers Cataloging Handbooks H4-1 (Name to Code) and H4-2 (Code to Name) and their latest supplements. The date of revision and the date of the supplements used appear at the bottom of each page. Alphabetical codes have been arbitrarily assigned to suppliers not appearing in the H4 Handbooks.

Code No.	Manufacturer	Address
00000	U.S.A. Common	Any supplier of U.S.
00136	McCoy Electronics	Mount Holly Springs, Pa.
00213	Sage Electronics Corp.	Rochester, N.Y.
00287	Cemco Inc.	Danielson, Conn.
00334	Humidial	Colton, Calif.
00348	Microtron Co., Inc.	Valley Stream, N.Y.
00373	Garlock Inc., Electronics Products Div.	Camden, N.J.
00656	Aerovox Corp.	New Bedford, Mass.
00779	Amp. Inc.	Harrisburg, Pa.
00781	Aircraft Radio Corp.	Boonton, N.J.
00815	Northern Engineering Laboratories, Inc.	Burlington, Wis.
00853	Sangamo Electric Co., Pickens Div.	Pickens, S.C.
00866	Goe Engineering Co.	Los Angeles, Calif.
00891	Carl E. Holmes Corp.	Los Angeles, Calif.
00929	Microlab Inc.	Livingston, N.J.
01009	Alden Products Co.	Brockton, Mass.
01121	Allen Bradley Co.	Milwaukee, Wis.
01255	Litton Industries, Inc.	Beverly Hills, Calif.
01281	TRW Semiconductors, Inc.	Lawndale, Calif.
01295	Texas Instruments, Inc., Transistor Products Div.	Dallas, Texas
01349	The Alliance Mfg. Co.	Alliance, Ohio
01589	Pacific Relays, Inc.	Van Nuys, Calif.
01930	Amerock Corp.	Rockford, Ill.
01961	Pulse Engineering Co.	Santa Clara, Calif.
02114	Ferroxcube Corp. of America	Saugerties, N.Y.
02286	Cole Rubber and Plastics Inc.	Sunnyvale, Calif.
02660	Amphenol-Borg Electronics Corp.	Chicago, Ill.
02735	Radio Corp. of America, Semiconductor and Materials Div.	Somerville, N.J.
02771	Vocaline Co. of America, Inc.	Old Saybrook, Conn.
02777	Hopkins Engineering Co.	San Fernando, Calif.
03508	G.E. Semiconductor Prod. Dept.	Syracuse, N.Y.
03705	Apex Machine & Tool Co.	Dayton, Ohio
03797	Eldema Corp.	Compton, Calif.
03877	Transitron Electric Corp.	Wakefield, Mass.
03888	Pyrofilm Resistor Co., Inc.	Cedar Knolls, N.J.
03954	Singer Co., Diehl Div. Finderne Plant	Sumerville, N.J.
04009	Arrow, Hart and Hegeman Elect. Co.	Hartford, Conn.
04013	Taurus Corp.	Lambertville, N.J.
04222	Hi-Q Division of Aerovox	Myrtle Beach, S.C.
04354	Precision Paper Tube Co.	Chicago, Ill.
04404	Dymec Division of Hewlett-Packard Co.	Palo Alto, Calif.
04651	Sylvania Electric Products, Microwave Device Div.	Mountain View, Calif.
04713	Motorola, Inc., Semiconductor Prod. Div.	Phoenix, Arizona
04732	Filtron Co., Inc. Western Div.	Culver City, Calif.
04773	Automatic Electric Co.	Northlake, Ill.
04796	Sequoia Wire Co.	Redwood City, Calif.
04811	Precision Coil Spring Co.	El Monte, Calif.
04870	P.M. Motor Company	Westchester, Ill.
05006	Twentieth Century Plastics, Inc.	Los Angeles, Calif.
05277	Westinghouse Electric Corp. Semi-Conductor Dept.	Youngwood, Pa.
05347	Ultronix, Inc.	San Mateo, Calif.
05593	Illumitronic Engineering Co.	Sunnyvale, Calif.
05616	Cosmo Plastic (c/o Electrical Spec. Co.)	Cleveland, Ohio
05624	Barber Colman Co.	Rockford, Ill.
05728	Tiffen Optical Co.	Roslyn Heights, Long Island, N.Y.
05729	Metro-Tel Corp.	Westbury, N.Y.
05783	Stewart Engineering Co.	Santa Cruz, Calif.
05820	Wakefield Engineering Inc.	Wakefield, Mass.
06004	Bassick Co., The	Bridgeport, Conn.
06090	Raychem Corp.	Redwood City, Calif.
06175	Bausch and Lomb Optical Co.	Rochester, N.Y.
06402	E.T.A. Products Co. of America	Chicago, Ill.
06540	Amatom Electronic Hardware Co., Inc.	New Rochelle, N.Y.
06555	Beede Electrical Instrument Co., Inc.	Penacook, N.H.
06666	General Devices Co., Inc.	Indianapolis, Ind.
06751	Semcor Div. Components Inc.	Phoenix, Ariz.
06812	Torrington Mfg. Co., West Div.	Van Nuys, Calif.
06980	Varian Assoc. Eimac Div.	San Carlos, Calif.
07088	Kelvin Electric Co.	Van Nuys, Calif.
07126	Digitran Co.	Pasadena, Calif.
07137	Transistor Electronics Corp.	Minneapolis, Minn.
07138	Westinghouse Electric Corp. Electronic Tube Div.	Elmira, N.Y.
07149	Filmohm Corp.	New York, N.Y.
07233	Cinch-Graphik Co.	City of Industry, Calif.
07261	Avnet Corp.	Culver City, Calif.
07263	Fairchild Camera & Inst Corp. Semiconductor Div.	Mountain View, Calif.
07322	Minnesota Rubber Co.	Minneapolis, Minn.
07387	Birtcher Corp., The	Monterey Park, Calif.
07700	Technical Wire Products Inc.	Cranford, N.J.
07910	Continental Device Corp.	Hawthorne, Calif.
07933	Raytheon Mfg. Co., Semiconductor Div.	Mountain View, Calif.
07966	Shockley Semi-Conductor Laboratories	Palo Alto, Calif.
07980	Hewlett-Packard Co., Boonton Radio Div.	Rockaway, N.J.
08145	U.S. Engineering Co.	Los Angeles, Calif.
08289	Blinn, Delbert Co.	Pomona, Calif.
08358	Burgess Battery Co.	Niagara Falls, Ontario, Canada
08664	Bristol Co., The	Waterbury, Conn.
08717	Sloan Company	Sun Valley, Calif.
08718	ITT Cannon Electric Inc., Phoenix Div.	Phoenix, Arizona
08792	CBS Electronics Semiconductor Operations, Div of C.B.S. Inc.	Lowell, Mass.
08984	Mel-Rain	Indianapolis, Ind.
09026	Babcock Relays Div.	Costa Mesa, Calif.
09134	Texas Capacitor Co.	Houston, Texas
09145	Atohm Electronics	Sun Valley, Calif.
09250	Electro Assemblies, Inc.	Chicago, Ill.
09569	Mallory Battery Co. of Canada, Ltd.	Toronto, Ontario, Canada
10214	General Transistor Western Corp.	Los Angeles, Calif.
10411	Ti-Tal, Inc.	Berkeley, Calif.
10646	Carborundum Co.	Niagara Falls, N.Y.
11236	CTS of Berne, Inc.	Berne, Ind.
11237	Chicago Telephone of California, Inc.	So. Pasadena, Calif.
11242	Bay State Electronics Corp.	Waltham, Mass.
11312	Teledyne Inc., Microwave Div.	Palo Alto, Calif.
11534	Duncan Electronics Inc.	Costa Mesa, Calif.
11711	General Instrument Corp., Semiconductor Div., Products Group	Newark, N.J.
11717	Imperial Electronic, Inc.	Buena Park, Calif.
11870	Melabs, Inc.	Palo Alto, Calif.
12136	Philadelphia Handle Co.	Camden, N.J.
12697	Clarostat Mfg. Co.	Dover, N.H.
12859	Nippon Electric Co., Ltd.	Tokyo, Japan
12881	Metex Electronics Corp.	Clark, N.J.
12930	Delta Semiconductor Inc.	Newport Beach, Calif.
12954	Dickson Electronics Corp.	Scottsdale, Arizona
13103	Thermolloy	Dallas, Texas
13396	Telefunken (GmbH)	Hanover, Germany
13835	Midland-Wright Div. of Pacific Industries, Inc.	Kansas City, Kansas
14099	Sem-Tech	Newbury Park, Calif.
14193	Calif. Resistor Corp.	Santa Monica, Calif.
14298	American Components, Inc.	Conshohocken, Pa.
14433	ITT Semiconductor, A Div. of Int. Telephone & Telegraph Corp.	West Palm Beach, Fla.
14493	Hewlett-Packard Company	Loveland, Colo.
14655	Cornell Dublier Electric Corp.	Newark, N.J.
14674	Corning Glass Works	Corning, N.Y.
14752	Electro Cube Inc.	So. Pasadena, Calif.
14960	Williams Mfg. Co.	San Jose, Calif.
15203	Webster Electronics Co.	New York, N.Y.
15291	Adjustable Bushing Co.	N. Hollywood, Calif.
15558	Micron Electronics	Garden City, Long Island, N.Y.
15566	Amprobe Inst. Corp.	Lynbrook, N.Y.
15772	Twentieth Century Coil Spring Co.	Santa Clara, Calif.
15818	Amelco Inc.	Mt. View, Calif.
15909	Daven Div. Thomas A. Edison Ind. McGraw-Edison Co.	Long Island City, N.Y.
16037	Spruce Pine Mica Co.	Spruce Pine, N.C.
16179	Omni-Spectra Inc.	Detroit, Ill.
16352	Computer Diode Corp.	Lodi, N.J.
16688	Ideal Prec. Meter Co., Inc. De Jur Meter Div.	Brooklyn, N.Y.
16758	Delco Radio Div. of G.M. Corp.	Kokomo, Inc.
17109	Thermonetics Inc.	Canoga Park, Calif.
17474	Tranex Company	Mountain View, Calif.
17675	Hamlin Metal Products Corp.	Akron, Ohio
17745	Angstrohm Prec. Inc.	No. Hollywood, Calif.
18042	Power Design Pacific Inc.	Palo Alto, Calif.
18476	Ty-Car Mfg. Co., Inc.	Holliston, Mass.
18486	TRW Elect. Comp. Div.	Des Plaines, Ill.
18583	Curtis Instrument, Inc.	Mt. Kisco, N.Y.
18873	E.I. DuPont and Co., Inc.	Wilmington, Del.
18911	Durant Mfg. Co.	Milwaukee, Wis.
19315	Bendix Corp., The Eclipse-Poineer Div.	Teterboro, N.J.
19500	Thomas A. Edison Industries, Div. of McGraw-Edison Co.	West Orange, N.J.
19644	LRC Electronics	Horseheads, N.Y.
19701	Electra Mfg. Co.	Independence, Kansas
20183	General Atronics Corp.	Philadelphia, Pa.
21226	Executone, Inc.	Long Island City, N.Y.
21335	Fafnir Bearing Co., The	New Britain, Conn.
21520	Fansteel Metallurgical Corp.	N. Chicago, Ill.
23783	British Radio Electronics Ltd.	Washington, D.C.
24455	G.E. Lamp Division	Nela Park, Cleveland, Ohio
24655	General Radio Co.	West Concord, Mass.
26365	Gries Reproducer Corp.	New Rochelle, N.Y.
26462	Grobet File Co. of America, Inc.	Carlstadt, N.J.
26992	Hamilton Watch Co.	Lancaster, Pa.
28480	Hewlett-Packard Co.	Palo Alto, Calif.
33173	G.E. Receiving Tube Dept.	Owensboro, Ky.
35434	Lectrohm Inc.	Chicago, Ill.
36196	Stanwyck Coil Products Ltd.	Hawkesbury, Ontario, Canada
37942	P.R. Mallory & Co. Inc.	Indianapolis, Ind.
39543	Mechanical Industries Prod. Co.	Akron, Ohio
40920	Miniature Precision Bearings, Inc.	Keene, N.H.
42190	Muter Co.	Chicago, Ill.
43990	C.A. Norgren Co.	Englewood, Colo.

00015-42
Revised: July, 1966

From: FSC. Handbook Supplements
H4-1 Dated JULY 1965
H4-2 Dated NOV 1962

Table 6-3. Code List of Manufacturers (Cont'd)

Code No.	Manufacturer	Address
44655	Ohmite Mfg. Co.	Skokie, Ill.
46384	Penn Eng. & Mfg. Corp.	Doylestown, Pa.
47904	Polaroid Corp.	Cambridge, Mass.
48620	Precision Thermometer & Inst. Co.	Southampton, Pa.
49956	Microwave & Power Tube Div.	Waltham, Mass.
52090	Rowan Controller Co.	Westminster, Md.
52983	Sanborn Company	Waltham, Mass.
54294	Shallcross Mfg. Co.	Selma, N.C.
55026	Simpson Electric Co.	Chicago, Ill.
55933	Sonotone Corp.	Elmsford, N.Y.
55938	Raytheon Co. Commercial Apparatus & Systems Div.	So. Norwalk, Conn.
56137	Spaulding Fibre Co., Inc.	Tonawanda, N.Y.
56289	Sprague Electric Co.	North Adams, Mass.
59446	Telex, Inc.	St. Paul, Minn.
59730	Thomas & Betts Co.	Elizabeth, N.J.
60741	Triplett Electrical Inst. Co.	Bluffton, Ohio
61775	Union Switch and Signal, Div. of Westinghouse Air Brake Co.	Pittsburgh, Pa.
62119	Universal Electric Co.	Owosso, Mich.
63743	Ward-Leonard Electric Co.	Mt. Vernon, N.Y.
64959	Western Electric Co., Inc.	New York, N.Y.
65092	Weston Inst. Inc. Weston-Newark	Newark, N.J.
66295	Wittek Mfg. Co.	Chicago, Ill.
66346	Revere Wollansak Div. Minn. Mining & Mfg. Co.	St. Paul, Minn.
70276	Allen Mfg. Co.	Hartford, Conn.
70318	Allmetal Screw Product Co., Inc.	Garden City, N.Y.
70485	Atlantic India Rubber Works, Inc.	Chicago, Ill.
70563	Amperite Co., Inc.	Union City, N.J.
70903	Belden Mfg. Co.	Chicago, Ill.
70998	Bird Electronic Corp.	Cleveland, Ohio
71002	Birnbach Radio Co.	New York, N.Y.
71041	Boston Gear Works Div. of Murray Co. of Texas	Quincy, Mass.
71218	Bud Radio, Inc.	Willoughby, Ohio
71286	Camloc Fastener Corp.	Paramus, N.J.
71313	Cardwell Condenser Corp.	Lindenhurst L.I., N.Y.
71400	Bussmann Mfg. Div. of McGraw-Edison Co.	St. Louis, Mo.
71436	Chicago Condenser Corp.	Chicago, Ill.
71447	Calif. Spring Co., Inc.	Pico-Rivera, Calif.
71450	CTS Corp.	Elkhart, Ind.
71468	ITT Cannon Electric Inc.	Los Angeles, Calif.
71471	Cinema Plant, Hi-Q Div. Aerovox Corp.	Burbank, Calif.
71482	C.P. Clare & Co.	Chicago, Ill.
71590	Centralab Div. of Globe Union Inc.	Milwaukee, Wis.
71616	Commercial Plastics Co.	Chicago, Ill.
71700	Cornish Wire Co., The	New York, N.Y.
71707	Coto Coil Co., Inc.	Providence, R.I.
71744	Chicago Miniature Lamp Works	Chicago, Ill.
71753	A.O. Smith Corp., Crowley Div.	West Orange, N.J.
71785	Cinch Mfg. Co., Howard B. Jones Div.	Chicago, Ill.
71984	Dow Corning Corp.	Midland, Mich.
72136	Electro Motive Mfg. Co., Inc.	Willimantic, Conn.
72354	John E. Fast Co., Div. Victoreen Instr. Co.	Chicago, Ill.
72619	Dialight Corp.	Brooklyn, N.Y.
72656	Indiana General Corp., Electronics Div.	Keasby, N.J.
72699	General Instrument Corp., Cap. Div.	Newark, N.J.
72765	Drake Mfg. Co.	Chicago, Ill.
72825	Hugh H. Eby Inc.	Philadelphia, Pa.
72928	Gudeman Co.	Chicago, Ill.
72964	Robert M. Hadley Co.	Los Angeles, Calif.
72982	Erie Technological Products, Inc.	Erie, Pa.
73061	Hansen Mfg. Co., Inc.	Princeton, Ind.
73076	H.M. Harper Co.	Chicago, Ill.
73138	Helipot Div. of Beckman Inst., Inc.	Fullerton, Calif.
73293	Hughes Products Division of Hughes Aircraft Co.	Newport Beach, Calif.
73445	Amperex Electronic Co., Div. of North American Phillips Co., Inc.	Hicksville, N.Y.
73506	Bradley Semiconductor Corp.	New Haven, Conn.
73559	Carling Electric, Inc.	Hartford, Conn.
73682	George K. Garrett Co., Div. MSL Industries Inc.	Philadelphia, Pa.
73734	Federal Screw Products Inc.	Chicago, Ill.
73743	Fischer Special Mfg. Co.	Cincinnati, Ohio
73793	General Industries Co., The	Elyria, Ohio
73846	Goshen Stamping & Tool Co.	Goshen, Ind.
73899	JFD Electronics Corp.	Brooklyn, N.Y.
73905	Jennings Radio Mfg. Corp.	San Jose, Calif.
74276	Signalite Inc.	Neptune, N.J.
74455	J.H. Winns, and Sons	Winchester, Mass.
74861	Industrial Condenser Corp.	Chicago, Ill.
74868	R.F. Products Division of Amphenol-Borg Electronics Corp.	Danbury, Conn.
74970	E.F. Johnson Co.	Waseca, Minn.
75042	International Resistance Co.	Philadelphia, Pa.
75378	CTS Knights Inc.	Sandwich, Ill.
75382	Kulka Electric Corporation	Mt. Vernon, N.Y.
75818	Lenz Electric Mfg. Co.	Chicago, Ill.
75915	Littlefuse, Inc.	Des Plaines, Ill.
76005	Lord Mfg. Co.	Erie, Pa.
76210	C.W. Marwedel	San Francisco, Calif.
76487	James Millen Mfg. Co., Inc.	Malden, Mass.
76493	J.W. Miller Co.	Los Angeles, Calif.
76530	Cinch-Monadnock, Div. of United Carr Fastener Corp.	San Leandro, Calif.
76545	Mueller Electric Co.	Cleveland, Ohio
76703	National Union	Newark, N.J.
76854	Oak Manufacturing Co.	Crystal Lake, Ill.
77068	Bendix Corp., The Bendix Pacific Div.	N. Hollywood, Calif.
77075	Pacific Metals Co.	San Francisco, Calif.
77221	Phanostran Instrument and Electronic Co.	South Pasadena, Calif.
77252	Philadelphia Steel and Wire Corp.	Philadelphia, Pa.
77342	American Machine & Foundry Co. Potter & Brumfield Div.	Princeton, Ind.
77630	TRW Electronic Components Div.	Camden, N.J.
77638	General Instrument Corp., Rectifier Div.	Brooklyn, N.Y.
77764	Resistance Products Co.	Harrisburg, Pa.
77969	Rubbercraft Corp. of Calif.	Torrance, Calif.
78189	Shakeproof Division of Illinois Tool Works	Elgin, Ill.
78283	Signal Indicator Corp.	New York, N.Y.
78290	Struthers-Dunn Inc.	Pitman, N.J.
78452	Thompson-Bremer & Co.	Chicago, Ill.
78471	Tilley Mfg. Co.	San Francisco, Calif.
78488	Stackpole Carbon Co.	St. Marys, Pa.
78493	Standard Thomson Corp.	Waltham, Mass.
78553	Tinnerman Products, Inc.	Cleveland, Ohio
78790	Transformer Engineers	San Gabriel, Calif.
78947	Ucinite Co.	Newtonville, Mass.
79136	Waldes Kohinoor Inc.	Long Island City, N.Y.
79142	Veeder Root, Inc.	Hartford, Conn.
79251	Wenco Mfg. Co.	Chicago, Ill.
79727	Continental-Wirt Electronics Corp.	Philadelphia, Pa.
79963	Zierick Mfg. Corp.	New Rochelle, N.Y.
80031	Mepco Division of Sessions Clock Co.	Morristown, N.J.
80120	Schnitzer Alloy Products Co.	Elizabeth, N.J.
80130	Times Telephoto Equipment	New York, N.Y.
80131	Electronic Industries Association. Any brand Tube meeting EIA Standards-Washington, DC.	
80207	Unimax Switch, Div. Maxon Electronics Corp.	Wallingford, Conn.
80223	United Transformer Corp.	New York, N.Y.
80248	Oxford Electric Corp.	Chicago, Ill.
80294	Bourns Inc.	Riverside, Calif.
80411	Acro Div. of Robertshaw Controls Co.	Columbus, Ohio
80486	All Star Products Inc.	Defiance, Ohio
80509	Avery Adhesive Label Corp.	Monrovia, Calif.
80583	Hammarlund Co., Inc.	New York, N.Y.
80640	Stevens, Arnold, Co., Inc.	Boston, Mass.
81030	International Instruments Inc.	Orange, Conn.
81073	Grayhill Co.	LaGrange, Ill.
81095	Triad Transformer Corp.	Venice, Calif.
81312	Winchester Elec. Div. Litton Ind., Inc.	Oakville, Conn.
81349	Military Specification	. . . . .
81483	International Rectifier Corp.	El Segundo, Calif.
81541	Airpax Electronics, Inc.	Cambridge, Mass.
81860	Barry Controls, Div. Barry Wright Corp.	Watertown, Mass.
82042	Carter Precision Electric Co.	Skokie, Ill.
82047	Sperti Faraday Inc., Copper Hewitt Electric Div.	Hoboken, N.J.
82142	Jeffers Electronics Division of Speer Carbon Co.	Du Bois, Pa.
82170	Fairchild Camera & Inst. Corp., Defense Prod. Division	Clifton, N.J.
82209	Maguire Industries, Inc.	Greenwich, Conn.
82219	Sylvania Electric Prod. Inc. Electronic Tube Division	Emporium, Pa.
82376	Astron Corp.	East Newark, Harrison, N.J.
82389	Switchcraft, Inc.	Chicago, Ill.
82647	Metals & Controls Inc. Spencer Products	Attleboro, Mass.
82768	Phillips-Advance Control Co.	Joliet, Ill.
82866	Research Products Corp.	Madison, Wis.
82877	Rotron Mfg. Co., Inc.	Woodstock, N.Y.
82893	Vector Electronic Co.	Glendale, Calif.
83053	Western Washer Mfg. Co.	Los Angeles, Calif.
83058	Carr Fastener Co.	Cambridge, Mass.
83086	New Hampshire Ball Bearing, Inc.	Peterborough, N.H.
83125	General Instrument Corp., Capacitor Div.	Darlington, S.C.
83148	ITT Wire and Cable Div.	Los Angeles, Calif.
83186	Victory Engineering Corp.	Springfield, N.J.
83298	Bendix Corp., Red Bank Div.	Red Bank, N.J.
83315	Hubbell Corp.	Mundelein, Ill.
83330	Smith, Herman H., Inc.	Brooklyn, N.Y.
83385	Central Screw Co.	Chicago, Ill.
83501	Gavitt Wire and Cable Co. Div. of Amerace Corp.	Brookfield, Mass.
83594	Burroughs Corp. Electronic Tube Div.	Plainfield, N.J.
83740	Union Carbide Corp. Consumer Prod. Div.	New York, N.Y.
83777	Model Eng. and Mfg., Inc.	Huntington, Ind.
83821	Loyd Scruggs Co.	Festus, Mo.
83942	Aeronautical Inst. & Radio Co.	Lodi, N.J.
84171	Arco Electronics Inc.	Great Neck, N.Y.
84396	A.J. Glesener Co., Inc.	San Francisco, Calif.
84411	TRW Capacitor Div.	Ogallala, Neb.
84970	Sarkes Tarzian, Inc.	Bloomington, Ind.
85454	Boonton Molding Company	Boonton, N.J.

From: FSC. Handbook Supplements
H4-1 Dated JULY 1965
H4-2 Dated NOV. 1962

00015-42
Revised: July, 1966

Table 6-3. Code List of Manufacturers (Cont'd)

Code No.	Manufacturer	Address
85471	A.B. Boyd Co.	San Francisco, Calif.
85474	R.M. Bracamonte & Co.	San Francisco, Calif.
85660	Koiled Kords, Inc.	Hamden, Conn.
85911	Seamless Rubber Co.	Chicago, Ill.
86197	Clifton Precision Products Co., Inc.	Clifton Heights, Pa.
86579	Precision Rubber Products Corp.	Dayton, Ohio
86684	Radio Corp. of America, Electronic Comp. & Devices Div.	Harrison, N.J.
87034	Marco Industries	Anaheim, Calif.
87216	Philco Corporation (Lansdale Division)	Lansdale, Pa.
87473	Western Fibrous Glass Products Co.	San Francisco, Calif.
87664	Van Waters & Rogers Inc.	San Francisco, Calif.
87930	Tower Mfg. Corp.	Providence, R.I.
88140	Cutler-Hammer, Inc.	Lincoln, Ill.
88220	Gould-National Batteries, Inc.	St. Paul, Minn.
88421	Federal Telephone & Radio Corp.	Clifton, N.J.
88698	General Mills, Inc.	Buffalo, N.Y.
89231	Graybar Electric Co.	Oakland, Calif.
89665	United Transformer Co.	Chicago, Ill.
90179	US Rubber Co., Consumer Ind. & Plastics Prod. Div.	Passaic, N.J.
90970	Bearing Engineering Co.	San Francisco, Calif.
91260	Connor Spring Mfg. Co.	San Francisco, Calif.
91345	Miller Dial & Nameplate Co.	El Monte, Calif.
91418	Radio Materials Co.	Chicago, Ill.
91506	Augat Inc.	Attleboro, Mass.
91637	Dale Electronics, Inc.	Columbus, Nebr.
91662	Elco Corp.	Willow Grove, Pa.
91737	Gremar Mfg. Co., Inc.	Wakefield, Mass.
91827	K F Development Co.	Redwood City, Calif.
91929	Honeywell Inc., Micro Switch Div.	Freeport, Ill.
91961	Nahm-Bros. Spring Co.	Oakland, Calif.
92180	Tru-Connector Corp.	Peabody, Mass.
92367	Elgeet Optical Co. Inc.	Rochester, N.Y.
92196	Universal Industries, Inc.	City of Industry, Calif.
92607	Tensolite Insulated Wire Co., Inc.	Tarrytown, N.Y.
93332	Sylvania Electric Prod. Inc. Semiconductor Div.	Woburn, Mass.
93369	Robbins and Myers, Inc.	New York, N.Y.
93410	Stevens Mfg. Co., Inc.	Mansfield, Ohio
93929	G.V. Controls	Livingston, N.J.
94137	General Cable Corp.	Bayonne, N.J.
94144	Raytheon Co., Comp. Div., Ind. Comp. Operations	Quincy, Mass.
94148	Scientific Electronics Products, Inc.	Loveland, Colo.
94154	Tung-Sol Electric, Inc.	Newark, N.J.
94197	Curtiss-Wright Corp. Electronics Div.	East Paterson, N.J.
94222	South Chester Corp.	Chester, Pa.
94310	Tru-Ohm Products Memcor Components Div.	Huntington, Ind.
94330	Wire Cloth Products, Inc.	Bellwood, Ill.
94682	Worcester Pressed Aluminum Corp.	Worcester, Mass.
94696	Magnecraft Electric Co.	Chicago, Ill.
95023	George A. Philbrick Researchers, Inc.	Boston, Mass.
95236	Allies Products Corp.	Miami, Fla.
95238	Continental Connector Corp.	Woodside, N.Y.
95263	Leecraft Mfg. Co., Inc.	Long Island, N.Y.
95264	Lerco Electronics, Inc.	Burbank, Calif.
95265	National Coil Co.	Sheridan, Wyo.
95275	Vitramon, Inc.	Bridgeport, Conn.
95348	Gordos Corp.	Bloomfield, N.J.
95354	Methode Mfg. Co.	Chicago, Ill.
95712	Dage Electric Co., Inc.	Franklin, Ind.
95984	Siemon Mfg. Co.	Wayne, Ill.
95987	Weckesser Co.	Chicago, Ill.
96067	Huggins Laboratories	Sunnyvale, Calif.
96095	Hi-Q Div. of Aerovox Corp.	Olean, N.Y.
96256	Thordarson-Meissner Inc.	Mt. Carmel, Ill.
96296	Solar Manufacturing Co.	Los Angeles, Calif.
96330	Carlton Screw Co.	Chicago, Ill.
96341	Microwave Associates, Inc.	Burlington, Mass.
96501	Excel Transformer Co.	Oakland, Calif.
97464	Industrial Retaining Ring Co.	Irvington, N.J.
97539	Automatic & Precision Mfg.	Englewood, N.J.
97979	Reon Resistor Corp.	Yonkers, N.Y.
97983	Litton System Inc., Adler-Westrex Commun. Div.	New Rochelle, N.Y.
98141	R-Troncis, Inc.	Jamaica, N.Y.
98159	Rubber Teck, Inc.	Gardena, Calif.
98220	Hewlett-Packard Co., Moseley Div.	Pasadena, Calif.
98278	Microdot, Inc.	So. Pasadena, Calif.
98291	Sealectro Corp.	Mamaroneck, N.Y.
98376	Zero Mfg. Co.	Burbank, Calif.
98731	General Mills Inc., Electronics Div.	Minneapolis, Minn.
98734	Paeco Div. of Hewlett-Packard Co.	Palo Alto, Calif.
98821	North Hills Electronics, Inc.	Glen Cove, N.Y.
98978	International Electronic Research Corp.	Burbank, Calif.
99109	Columbia Technical Corp.	New York, N.Y.
99313	Varian Associates	Palo Alto, Calif.
99378	Atlee Corp.	Winchester, Mass.
99515	Marshall Ind. Elect. Products Div.	San Marino, Calif.
99707	Control Switch Division, Controls Co. of America	El Segundo, Calif.
99800	Delevan Electronics Corp.	East Aurora, N.Y.
99848	Wilco Corporation	Indianapolis, Ind.
99934	Renbrandt, Inc.	Boston, Mass.
99942	Hoffman Electronics Corp. Semiconductor Div.	El Monte, Calif.
99957	Technology Instrument Corp. of Calif.	Newbury Park, Calif.

THE FOLLOWING HP VENDORS HAVE NO NUMBER ASSIGNED IN THE LATEST SUPPLEMENT TO THE FEDERAL SUPPLY CODE FOR MANUFACTURERS HANDBOOK.

0000F	Malco Tool and Die	Los Angeles, Calif.
0000M	Western Coil Div. of Automatic Ind., Inc.	Redwood City, Calif.
0000Z	Willow Leather Products Corp.	Newark, N.J.
000AA	British Radio Electronics Ltd.	Washington, D.C.
000AB	ETA	England
000BB	Precision Instrument Components Co.	Van Nuys, Calif.
000MM	Rubber Eng. & Development	Hayward, Calif.
000NN	A "N" D Mfg. Co.	San Jose, Calif.
000QQ	Cooltron	Oakland, Calif.
000WW	California Eastern Lab.	Burlington, Calif.
000YY	S.K. Smith Co.	Los Angeles, Calif.

From: FSC. Handbook Supplements
H4-1 Dated JULY 1965
H4-2 Dated NOV. 1962

00015-42
Revised: July, 1966

SECTION VII
MANUAL CHANGES

7-1. MANUAL CHANGES.

7-2. This manual applies directly to the 5280A Reversible Counters having serial prefix No. 640-. This manual with the following change also applies to the 5280A Reversible Counter having serial prefix numbers 612- and 602-. To adapt this manual to instruments with 612 and 602 serial prefix no. make the following change:

Figure 8-6, A2 through A7 Reversible Decimal Counter Assembly.

A2 through A7C2, C4, C5, C6
Change to 82 pf
A2 through A7, R1, R3, R5, R7
Change to 5100 ohms

Table 6-1 and 6-2:
A2 through A7C2, C4, C5, C6 (0140-0191)
Change to C: fxd, mica, 82 pf, 5%, 300 vdcw
HP Part No. 0140-0193
A2 through A7R1, R3, R5, R7 (0683-5325)
Change to R: fxd, comp, 5100 ohms, 5%, 1/4W,
HP Part No. 0683-5125

7-3. H06-5280A (7-digit display) SPECIAL ORDER.

7-4. The H06-5280A is a standard HP Model 5280A Reversible Counter electrically modified by adding an additional Reversible Decimal Counter Assembly (A8) to provide a seven-digit display. A8 RDCA is added between DS3, the polarity indicator display tube and A7 RDCA. The added assembly is identical to A2 through A7. Connections to A8 are the same as those for A7 with the overflow connected to A8(9). The BCD outputs from A8 to DIGITAL RECORDER connector J9 are as shown in Figure 8-9. In all other respects the H06-5280A is identical to the standard instrument.

7-5. H02-5280A (8-digit display) SPECIAL ORDER.

7-6. The H02-5280A is a standard HP Model 5280A Reversible Counter electrically modified by the addition of Reversible Decimal Counter Assemblies (A8 and A9) to provide an eight digit display. The added assemblies are identical to A2 through A7. Connections to A8 and A9 are the same as those for A2 through A7, with the overflow connected to A9 (9). The BCD outputs from A8 and A9 to DIGITAL RECORDER connector J9 are as shown in Figure 8-9.

7-7. Polarity indicator display tube (DS3) is removed and replaced by two neon lamps as shown in Figure 7-1. Added parts in the neon lamp circuits are identified in Figure 7-1 and the parts are listed below.

H02 DS1, DS2 Light Indicator Clear HP Part No.
HP Part No. 1450-0042
H02R1, R3; R: fxd, comp., 390K ohms, 10%, 1/2W,
HP Part No. 0687-3941
H02R2, R4; R: fxd, comp, 470K ohms, 10%, 1/2W,
HP Part No. 0687-4741.

7-8. In all other respects the H02-5280A is identical to the standard instrument.

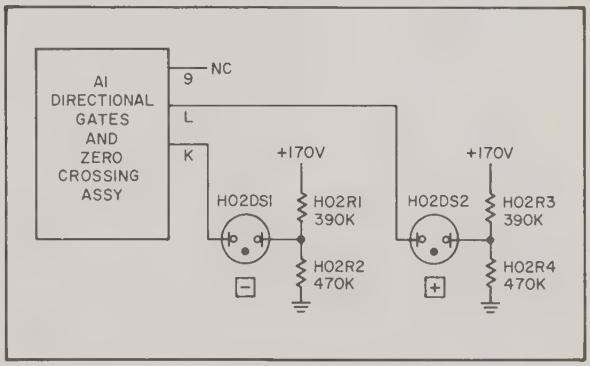

Figure 7-1. Neon Lamp Polarity Indicators

SECTION VIII

CIRCUIT DIAGRAMS

8-1. INTRODUCTION.

8-2. This section contains Top and Bottom Instrument Component Locators (Figures 8-1 and 8-2), Schematic Diagram Notes (Figure 8-3), Overall Block Diagram (Figure 8-4)and schematic diagrams in order of their assembly designation (Figure 8-5 through 8-9). See Table 8-1 for assembly designations. Schematic diagram figures include assembly component locations, waveforms and dc voltages. The manual is constructed so that these diagrams can be unfolded and used with any other portion of the manual.

Table 8-1. Assembly Designations

A1	Directional Gates and Zero Crossing Assembly, Figure 8-5
A2	Reversible Decimal Counter Assembly (1) Figure 8-6
A3	Reversible Decimal Counter Assembly (10) Figure 8-6
A4	Reversible Decimal Counter Assembly (10^2) Figure 8-6
A5	Reversible Decimal Counter Assembly (10^3) Figure 8-6
A6	Reversible Decimal Counter Assembly (10^4) Figure 8-6
A7	Reversible Decimal Counter Assembly (10^5) Figure 8-6
A8	Special Order Reversible Decimal Counter Assembly (10^6) Figure 8-6
A9	Special Order Reversible Decimal Counter Assembly (10^7) Figure 8-6
A10	Gate Control Assembly, Figure 8-7
A11	Gate Control Amplifier Assembly, Figure 8-8
A12	Rectifier Assembly, Power Supply Figure 8-9
A13	Regulator Assembly, Power Supply Figure 8-9

8-3. COMPONENT LOCATION.

8-4. Figures 8-1 and 8-2 give top and bottom instrument component location. Assembly component location is provided with the schematic for each Assembly (Figure 8-4 through 8-9). Grids are used on all assembly component locators as an aid to location of components on the board.

8-5. WAVEFORMS.

8-6. The waveforms for the schematics were taken with a Hewlett-Packard Model 175A Oscilloscope with an HP 1755A Dual Trace Vertical Amplifier, HP10003 series 10:1 Divider Probes, and an HP 1780A Auxiliary Horizontal Plug-in. The counted signal used for the waveforms was a 1 MHz sine wave from an HP 651A Test Oscillator and the Gate Control signal was a square wave from a 211A Square Wave Generator. Procedures for observing waveforms are provided with the waveforms for each schematic diagram (Figure 8-4 through 8-8). Test points can be made accessible by removing the top cover and using the 15-pin extender board. Caution, when using the extender board: be sure to orient the assembly board as it was when installed in the instrument. Failure to do so will cause serious damage to the circuitry. Also, use caution to protect the assembly board and the extended board from coming in contact with other assembly boards while the instrument power is on.

8-7. DC VOLTAGES.

8-8. The dc voltages on the schematics were measured with a Hewlett-Packard Model 412A DC Voltmeter. The dc voltage measurements were made with the 5285A Plug-in installed and the plug-in set in the A+ MODE. The majority of the measurements were made with the 5280A in the MANUAL CLOSED GATE CONTROL position with the Reversible Counter reset to zero, sign +, and no overflow indication. The exceptions are called out on the schematics and the condition defined in the schematic notes.

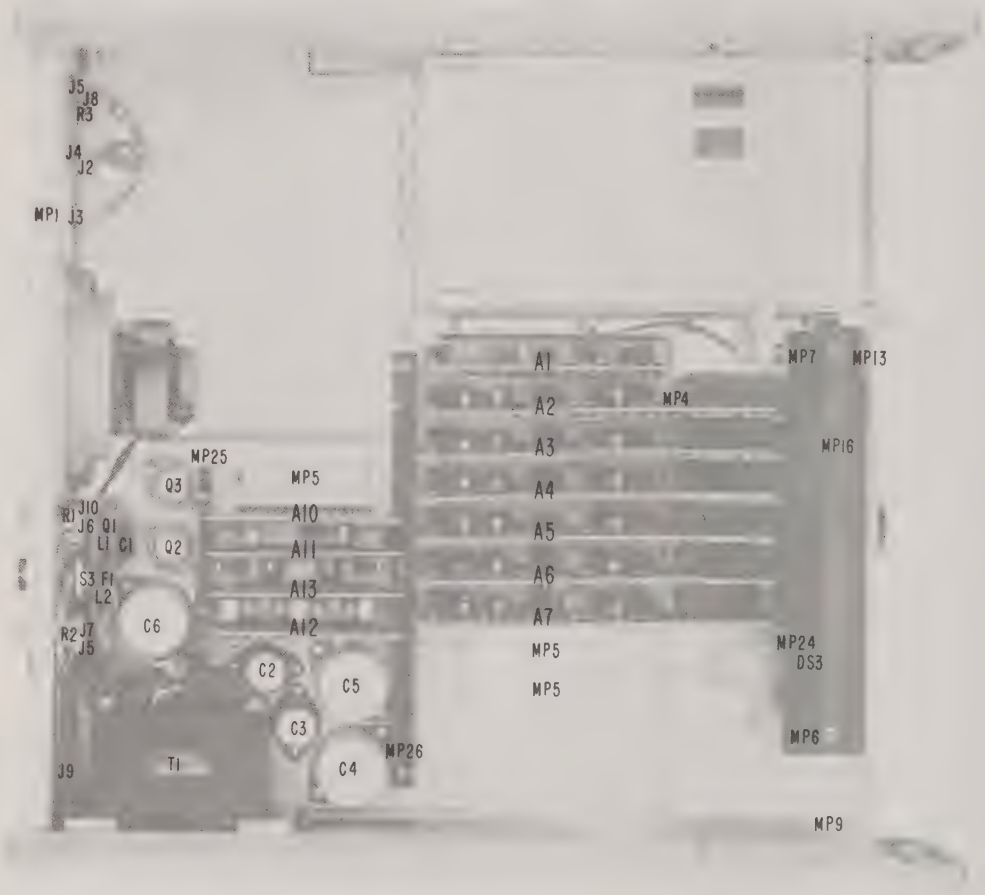

Figure 8-1. Top Internal View

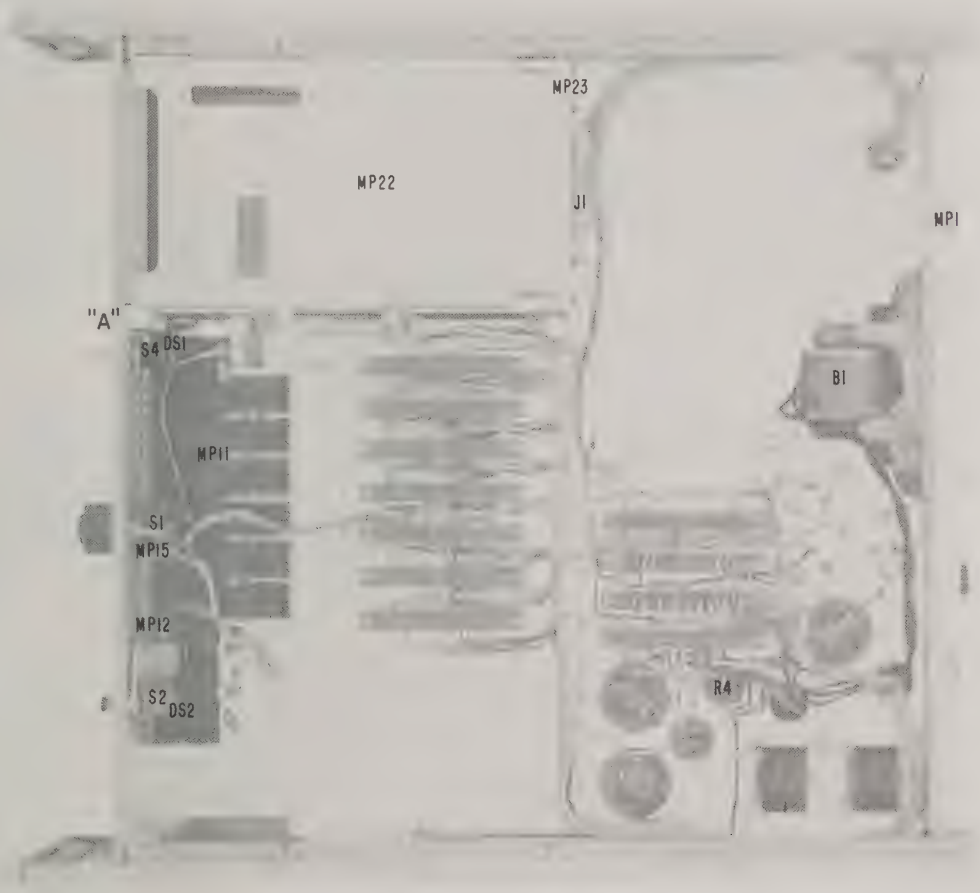

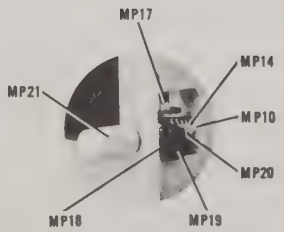

"A" LATCH

Figure 8-2. Bottom Internal View

SYMBOLS

- FRONT PANEL
- REAR PANEL
- KNOB CONTROL
- SCREWDRIVER ADJUST
- MAIN SIGNAL PATH
- FEEDBACK PATH
- CONDUCTING ELEMENT
- CW — WIPER MOVES TOWARD "CW" WHEN CONTROL IS ROTATED CLOCKWISE
- POWER LINE GROUND
- CIRCUIT COMMON GROUND
- 8 — TEST POINT
- A — "AND" GATE
- I — INHIBIT GATE
- O — "OR" GATE

WAVEFORMS SHOWN ARE TYPICAL

SWITCH DESIGNATIONS

A3S1BR(2-1/2)

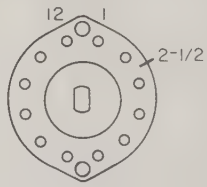

A3S1	SWITCH S1 WITHIN ASSEMBLY A3
B	2ND WAFER FROM FRONT (A=1ST, ETC)
R	REAR OF WAFER (F=FRONT)
(2-1/2)	TERMINAL LOCATION ($2\frac{1}{2}$) (VIEWED FROM FRONT)

REFERENCE DESIGNATIONS

REFERENCE DESIGNATIONS WITHIN ASSEMBLIES ARE ABBREVIATED. ADD ASSEMBLY NUMBER TO ABBREVIATION FOR COMPLETE DESCRIPTION.

ASSEMBLY	ABBREVIATION	COMPLETE DESCRIPTION
A25	C1	A25C1
A25A1	CR1	A25A1CR1
NO PREFIX	J3	J3

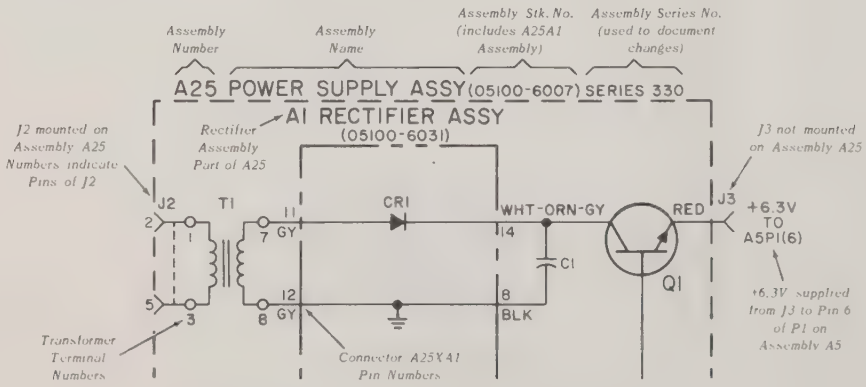

Figure 8-3. General Notes for Schematic Diagrams

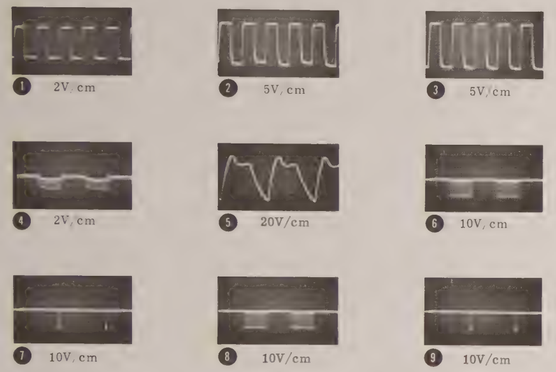

OVERALL BLOCK DIAGRAM TEST POINTS

1. Connect Square Wave Generator to both the START and STOP INPUTS and set for 100 kHz at 2.4 V p-p.
2. Set Reversible Counter GATE CONTROL switch to EXTERNAL DUAL.
3. Connect Test Oscillator to Plug-In A INPUT, and set for 1 MHz at 100 mV.
4. Set Plug-In mode to A + MODE.
5. Set Oscilloscope Sweep Time to 5 μs/cm, Sensitivity as shown with each waveform and externally sync Oscilloscope on 100 kHz gate control signal.
6. Check Test Points 1 through 7.
7. To check Test Points 8 and 9 switch Plug-In Mode Switch between + and -. The display should appear for a short period while the RDCA's are counting down to zero.

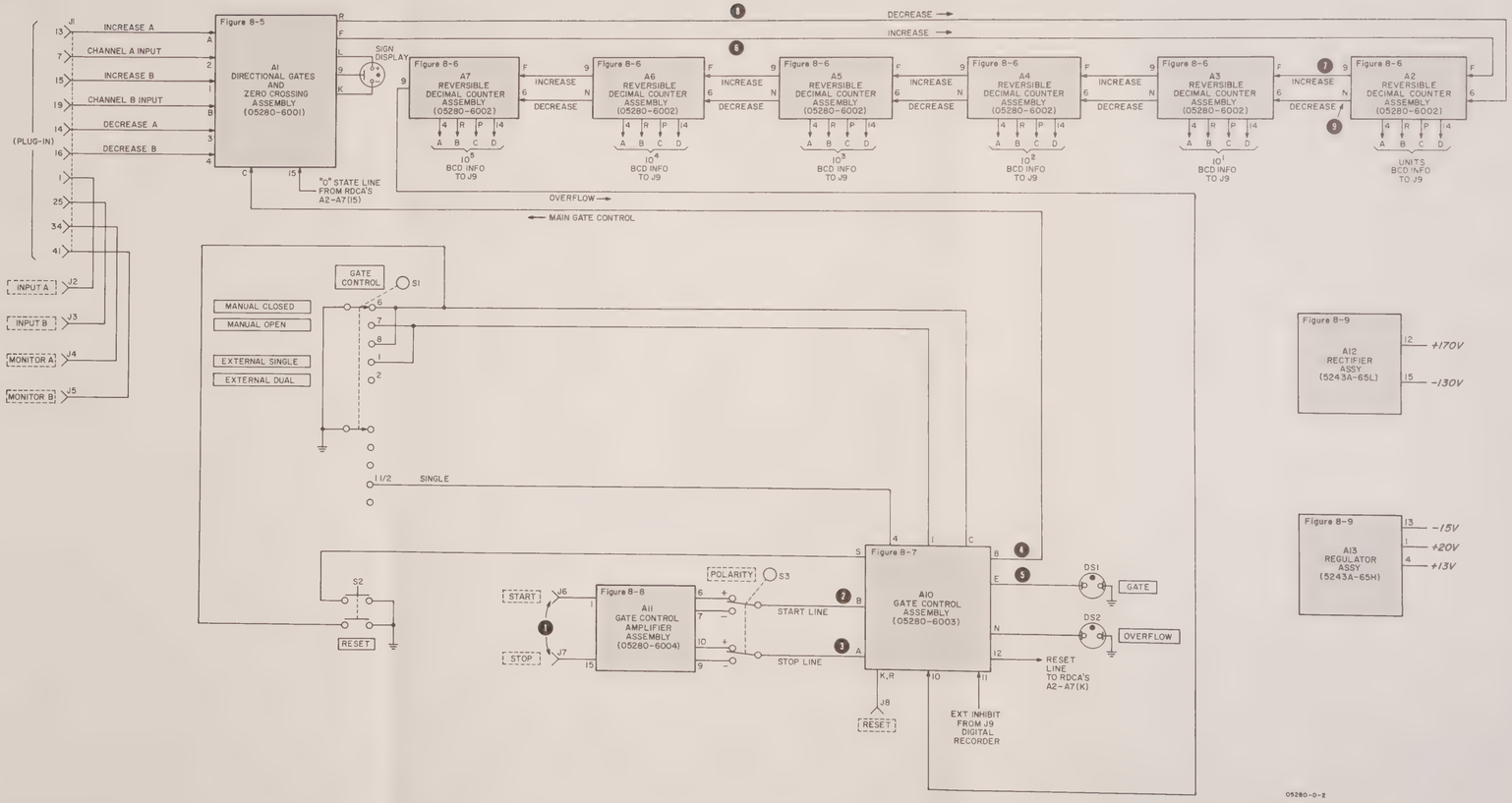

Figure 8-4. Overall Block Diagram

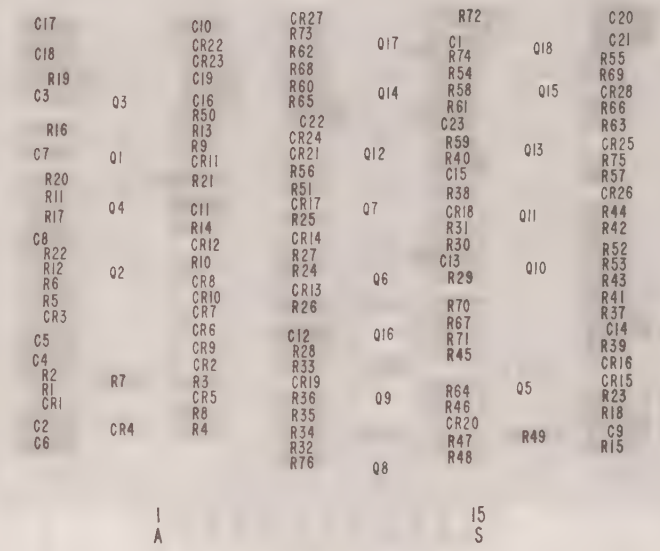

C1	5B	CR5	4D	Q6	5C	R17	3C	R47	5D
C2	2D	CR6	4C	Q7	5C	R18	6D	R48	5D
C3	2B	CR7	4C	Q8	5D	R19	3B	R49	6D
C4	2D	CR8	4C	Q9	5D	R20	3B	R50	4B
C5	2D	CR9	4D	Q10	6C	R21	4B	R51	4C
C6	2D	CR10	4C	Q11	6C	R22	3C	R52	6C
C7	2B	CR11	4B	Q12	5B	R23	6D	R53	6C
C8	2C	CR12	4C	Q13	6B	R24	4C	R54	5B
C9	6D	CR13	4C	Q14	5B	R25	4C	R55	6B
C10	4A	CR14	4C	Q15	6B	R26	4C	R56	4B
C11	4C	CR15	6D	Q16	5C	R27	4C	R57	6B
C12	4C	CR16	6D	Q17	5B	R28	4D	R58	5B
C13	5C	CR17	4C	Q18	6B	R29	5C	R59	5B
C14	6C	CR18	5C			R30	5C	R60	4B
C15	5B	CR19	4D	R1	2D	R31	5C	R61	5B
C16	4B	CR20	5D	R2	2D	R32	4D	R62	4B
C17	2A	CR21	4B	R3	4D	R33	4D	R63	6B
C18	2B	CR22	4B	R4	4D	R34	4D	R64	5D
C19	4B	CR23	4B	R5	3C	R35	4D	R65	4B
C20	6A	CR24	4B	R6	3C	R36	4D	R66	6B
C21	6B	CR25	6B	R7	3D	R37	6C	R67	5C
C22	4B	CR26	6C	R8	4D	R38	5C	R68	4B
C23	5B	CR27	4A	R9	4B	R39	6D	R69	6B
		CR28	6B	R10	4C	R40	5B	R70	5C
				R11	3C	R41	6C	R71	5D
		Q1	3B	R12	3C	R42	6C	R72	5A
CR1	3D	Q2	3C	R13	4B	R43	6C	R73	4A
CR2	4D	Q3	3B	R14	4C	R44	6C	R74	5B
CR3	3C	Q4	3C	R15	6D	R45	5D	R75	6B
CR4	3D	Q5	6D	R16	3B	R46	5D	R76	4D

Figure 8-4
OVERALL BLOCK DIAGRAM

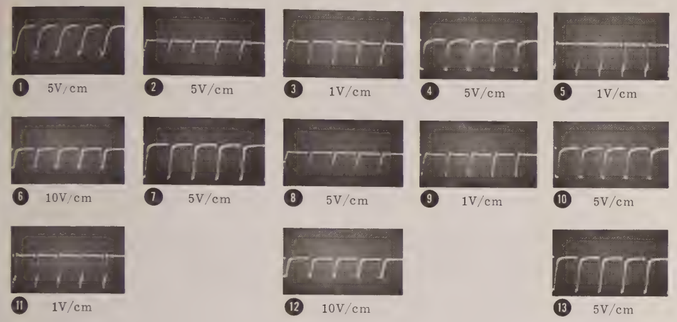

A1 DIRECTIONAL GATES AND ZERO CROSSING ASSEMBLY TEST POINTS

1. Set Reversible Counter GATE CONTROL switch to MANUAL OPEN.
2. Connect Test Oscillator to Plug-In A INPUT and set for 1 MHz at 100 mV.
3. Set Plug-In to A + MODE.
4. Set Oscilloscope Sweep Time to 0.5 μs/cm, Sensitivity as shown with each waveform and sync Oscilloscope on 1 MHz input signal.
5. Check Test Points 1 through 7.
6. Set Plug-In to A- MODE.
7. Check Test Points 8, 9, and 10.
8. To check Test Points 11, 12, and 13 disable "0" state detector (A1Q5) by connecting a 10K ohm resistor from -15V to A1Q5 base, and hold sign binary (A1Q6 - Q7) in its + state, by connecting a 10K ohm resistor from -15V to A1Q6 base.

NOTES

1. UNLESS OTHERWISE INDICATED: RESISTANCE IN OHMS CAPACITANCE IN PICOFARADS
2. MANUAL CLOSED / MANUAL OPEN
3. RESET TO ZERO / ANY COUNT BUT ALL ZERO

REFERENCE DESIGNATIONS

NO PREFIX	A1
DS3	C 1 - 23 CR1 - 28 Q 1 - 18 R 1 - 76

05280-D-3

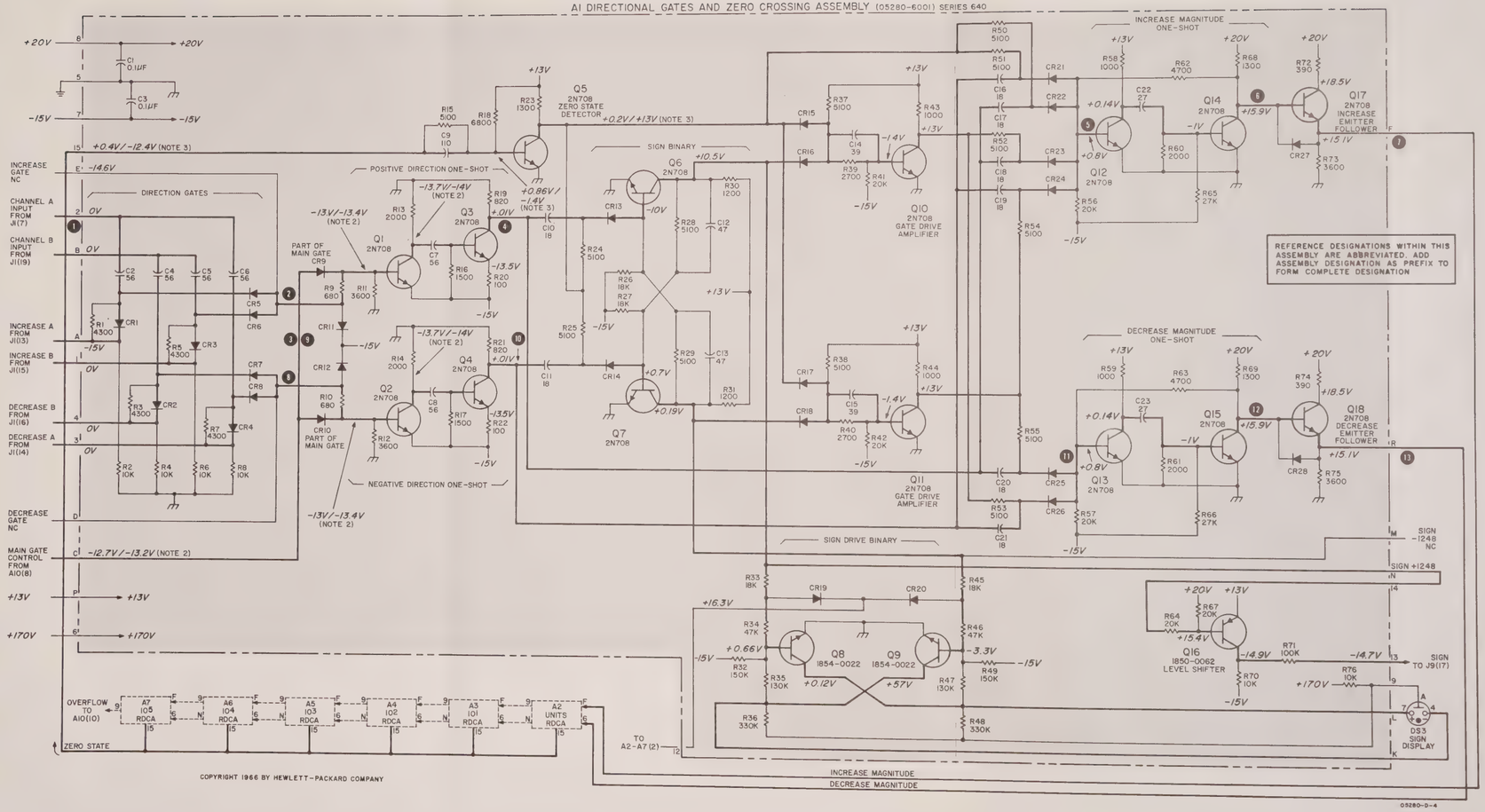

COPYRIGHT 1966 BY HEWLETT-PACKARD COMPANY

Figure 8-5. Directional Gates and Zero Crossing A1

Figure 8-5

DIRECTIONAL GATES AND ZERO CROSSING A1

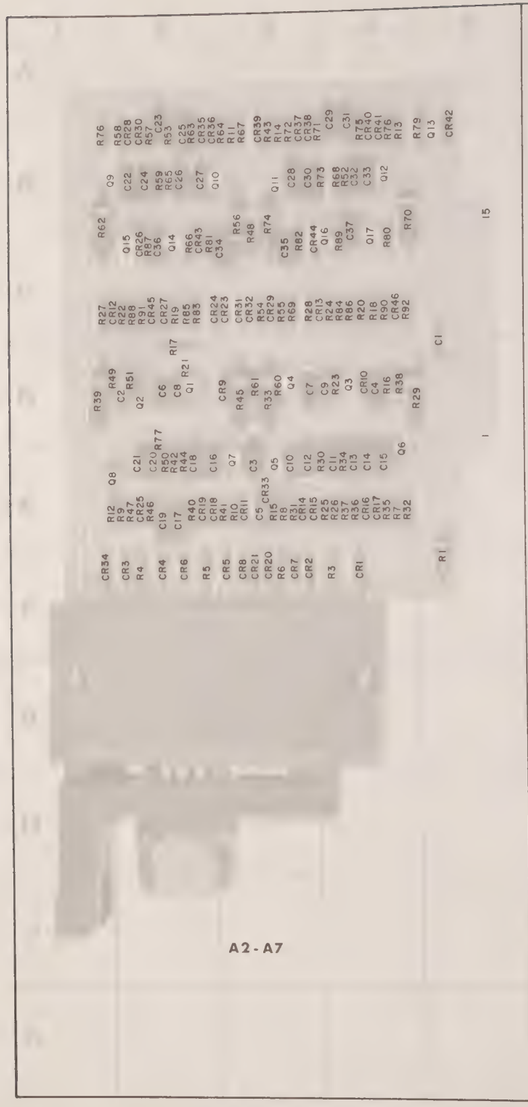

C1	5D	CR28	2B	R28	3C
C2	2D	CR29	3C	R29	4D
C3	3E	CR30	2B	R30	4E
C4	4D	CR31	3C	R31	3E
C5	3E	CR32	3C	R32	4E
C6	2D	CR33	3E	R33	3D
C7	3D	CR34	1F	R34	4E
C8	2D	CR35	2B	R35	4E
C9	4D	CR36	2B	R36	4E
C10	3E	CR37	3B	R37	4E
C11	4E	CR38	3B	R38	4D
C12	3E	CR39	3B	R39	1D
C13	4E	CR40	4B	R40	2E
C14	4E	CR41	4B	R41	3E
C15	4E	CR42	5B	R42	2E
C16	3E	CR43	2C	R43	3B
C17	2E	CR44	3C	R44	2E
C18	2E	CR45	2C	R45	3D
C19	2E	CR46	4C	R46	2E
C20	2E			R47	2E
C21	2E	Q1	2D	R48	3C
C22	2B	Q2	2D	R49	2D
C23	2B	Q3	4D	R50	2E
C24	2B	Q4	3D	R51	2D
C25	2B	Q5	3E	R52	4B
C26	2B	Q6	4E	R53	2B
C27	2B	Q7	3E	R54	3C
C28	3B	Q8	2E	R55	3C
C29	4B	Q9	2B	R56	3B
C30	3B	Q10	3B	R57	2B
C31	4B	Q11	3B	R58	2B
C32	4B	Q12	4B	R59	2B
C33	4B	Q13	5B	R60	3D
C34	3C	Q14	2C	R61	3D
C35	3C	Q15	2C	R62	1B
C36	2C	Q16	4C	R63	2B
C37	4C	Q17	4C	R64	3B
				R65	2B
CR1	4F	R1	5F	R66	2C
CR2	3F	R2	2G	R67	3B
CR3	2F	R3	4F	R68	4B
CR4	2F	R4	2F	R69	3C
CR5	3F	R5	2F	R70	4B
CR6	2F	R6	3F	R71	4B
CR7	3F	R7	4E	R72	3B
CR8	3F	R8	3E	R73	4B
CR9	3D	R9	2E	R74	3B
CR10	4D	R10	3E	R75	4B
CR11	3E	R11	3B	R76	4B
CR12	2C	R12	1E	R77	2E
CR13	4C	R13	4B	R78	1B
CR14	3E	R14	3B	R79	5B
CR15	3E	R15	3E	R80	4C
CR16	4E	R16	4D	R81	2C
CR17	4E	R17	2C	R82	3C
CR18	2E	R18	4C	R83	2C
CR19	2E	R19	2C	R84	4C
CR20	3F	R20	4C	R85	2C
CR21	3F	R21	2D	R86	4C
CR22	2E	R22	2C	R87	2C
CR23	3C	R23	4D		
CR24	3C	R24	4C		
CR25	2E	R25	4E		
CR26	2C	R26	4E		
CR27	2C	R27	1C		

02393-1

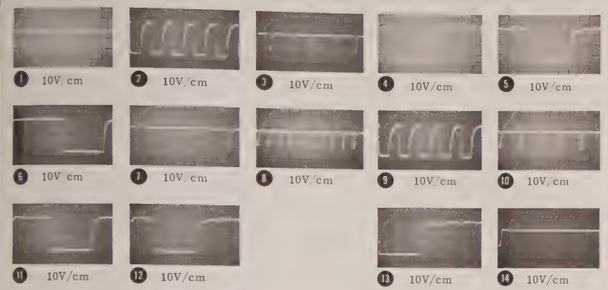

A2 - A7 REVERSIBLE DECIMAL COUNTER ASSEMBLY TEST POINTS

1. Set Reversible Counter GATE CONTROL switch to MANUAL OPEN.
2. Connect Test Oscillator to Plug-In A INPUT and set for 1 MHz at 100 mV rms.
3. Set Plug-In to A + MODE.
4. Set Oscilloscope Sweep Time to 1 μs/cm, Sensitivity as shown with each waveform and externally sync Oscilloscope to Out Increase One-shot A2 (9).
5. Check Test Points 1 through 7.
6. Change Plug-In setting to A - MODE. Externally sync Oscilloscope to Out Decrease One-Shot A2(N).
7. To check Test Points 8 through 14, disable "0" state detector (A1Q5) by connecting a 10K ohm resistor from -15V to A1Q5 base, and hold the Sign Binary (A1Q6 - Q7) in its + state, by connecting a 10K ohm resistor from -15V to A1Q6 base.

DECIMAL DIGIT	"1" STATE NEGATIVE TRUE LOGIC				RELEVANT STAGE				
					VI	BINARY			
	A	B	C	D		A	B	C	D
0	0	0	0	0	KOT				
1	1	0	0	0	JQT				
2	0	1	0	0	FNS				
3	1	1	0	0	BLR				
4	0	1	1	0	HPS				
5	1	1	1	0	DMR				
6	0	0	1	1	GPS				
7	1	0		1	CMR				
8	0	0	0	1	ENS				
9	1	0	0	1	ALR				

BCD PRINTER OUTPUT 1-2-4-8 "1" STATE POSITIVE TRUE LOGIC				
DECIMAL READOUT	Ap	Bp	Cp	Dp
0	0	0	0	0
1	1	0	0	0
2	0	1	0	0
3	1	1	0	0
4	0	0	1	0
5	1	0	1	0
6	0	1	1	0
7	1	1	1	0
8	0	0	0	1
9	1	0	0	1

NOTES

1. UNLESS OTHERWISE INDICATED: RESISTANCE IN OHMS CAPACITANCE IN PICOFARADS
2. ■ FILLED SQUARE INDICATES CONDUCTING ELEMENT FOR DECIMAL "0" BCD "0000"

REFERENCE DESIGNATIONS

A2 — A7
C 1 — 37
CR 1 — 46
DS 1 — 3
Q 1 — 17
R 1 — 92
V 1

05280-D-5

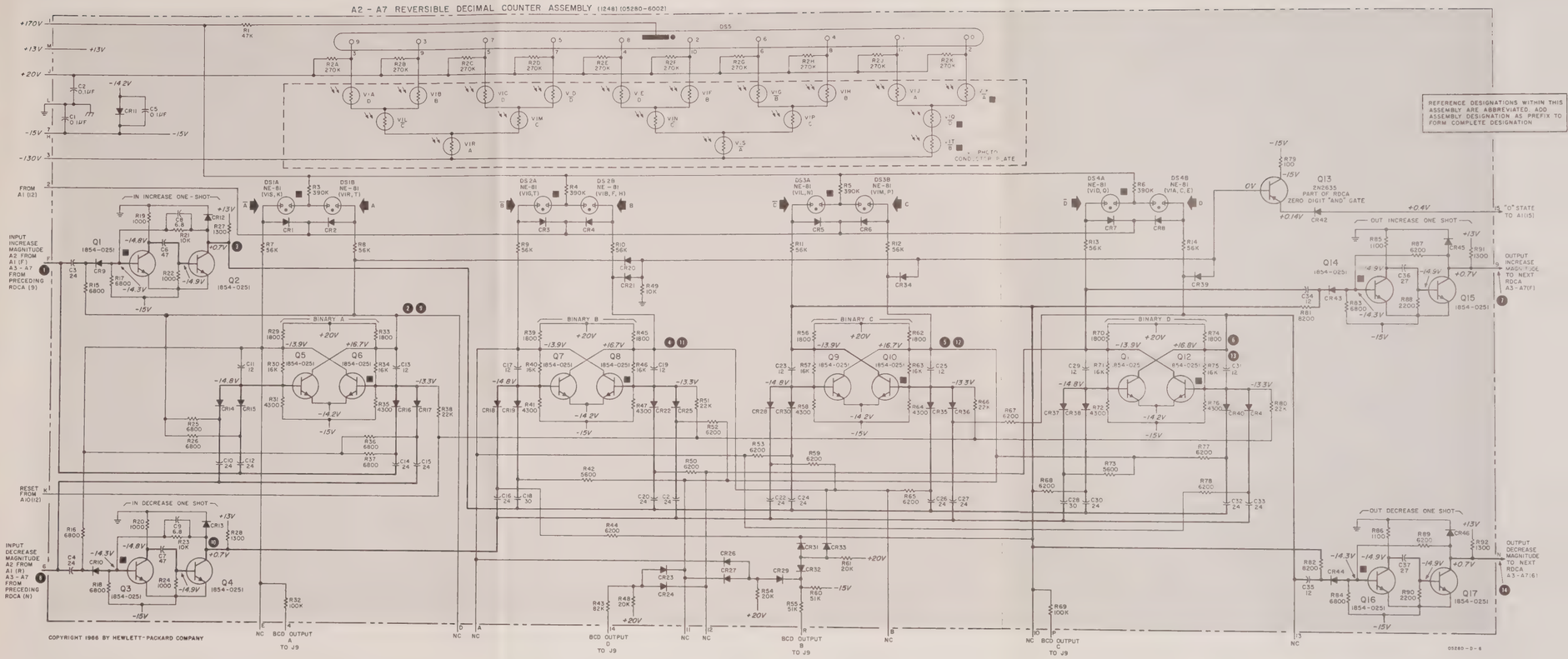

Figure 8-6. Reversible Decimal Counter Assembly A2-A7

Figure 8-6

REVERSIBLE DECIMAL COUNTER ASSEMBLY A2-A7

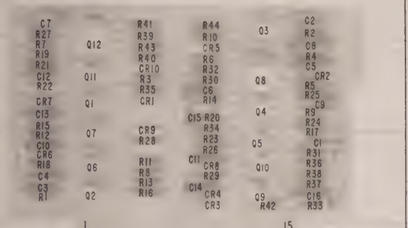

C1	4C	Q1	2B	R16	3C
C2	4A	Q2	2C	R17	4B
C3	1C	Q3	4A	R18	1C
C4	1C	Q4	4B	R19	1B
C5	4B	Q5	4C	R20	3B
C6	3B	Q6	2C	R21	1B
C7	1A	Q7	2C	R22	1B
C8	4B	Q8	4B	R23	3C
C9	4B	Q9	4C	R24	4B
C10	1C	Q10	4C	R25	4B
C11	3C	Q11	2B	R26	3C
C12	1B	Q12	2B	R27	1A
C13	1B			R28	3C
C14	3C			R29	3C
C15	3B	R1	1C	R30	3B
C16	4C	R2	4A	R31	4C
		R3	3B	R32	3B
		R4	4B	R33	3B
		R5	4B	R34	3C
CR1	3B	R6	3B	R35	3B
CR2	4B	R7	1B	R36	4C
CR3	3C	R8	3C	R37	4C
CR4	3C	R9	4B	R38	4C
CR5	3B	R10	3A	R39	3B
CR6	1C	R11	3C	R40	3B
CR7	1B	R12	1C	R41	3A
CR8	3C	R13	3C	R42	4C
CR9	3C	R14	3B	R43	3B
CR10	3B	R15	1B	R44	3A

A10 GATE CONTROL ASSEMBLY TEST POINTS

1. Connect Square Wave Generator to both START and STOP inputs, and set for 100 kHz at 2.4V p-p.
2. Set Reversible Counter GATE CONTROL switch to EXTERNAL DUAL.
3. Connect Test Oscillator to Plug-In A INPUT, and set for 1 MHz at 100 mV.
4. Set Plug-In to A + MODE.
5. Set Oscilloscope Sweep Time to 5 μs/cm, Sensitivity as shown with each waveform, and externally sync Oscilloscope on 100 kHz gate control signal.
6. Check Test Points 1 through 7.
7. Change GATE CONTROL switch to EXTERNAL SINGLE and check Test Points 8 through 11.

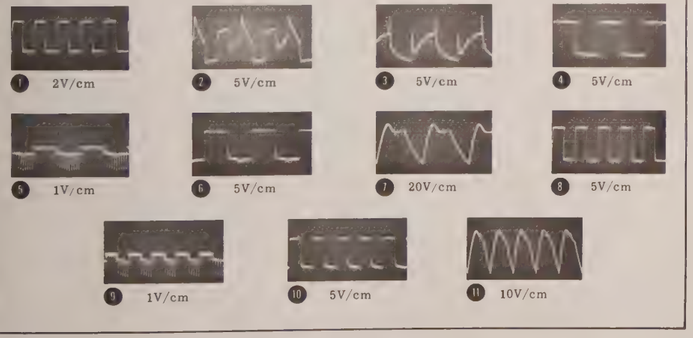

02393-1

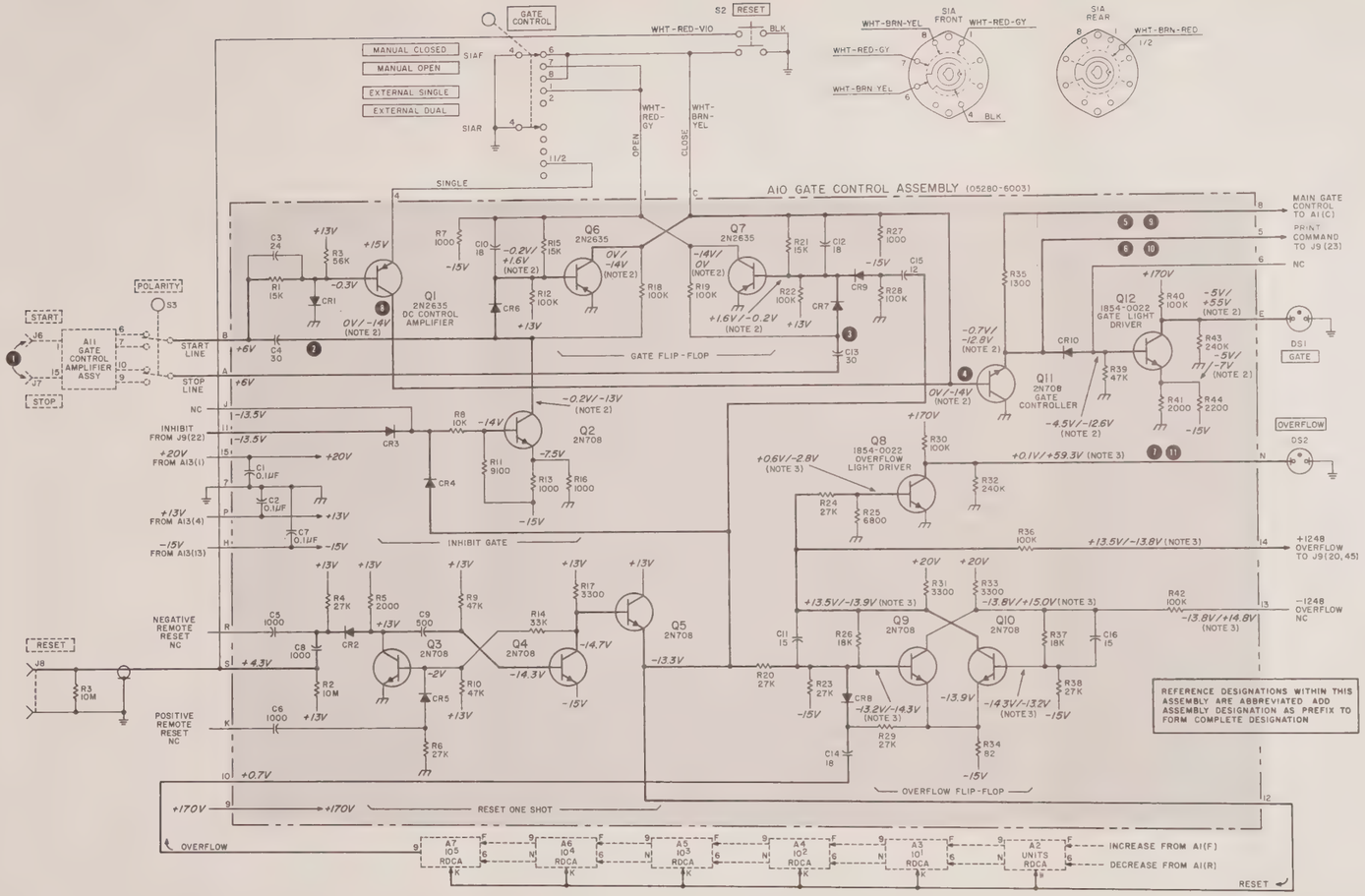

NOTES

1. UNLESS OTHERWISE INDICATED RESISTANCE IN OHMS, CAPACITANCE IN PICOFARADS
2. MANUAL CLOSED / MANUAL OPEN.
3. OVERFLOW LAMP OFF / OVERFLOW LAMP ON

REFERENCE DESIGNATIONS

NO PREFIX	A10
DS1,2 J8	C1-16 CR1-10
R3 S1,2	Q1-12 R1-44

COPYRIGHT 1966 BY HEWLETT-PACKARD COMPANY

05280-D-7

Figure 8-7. Gate Control Assembly A10

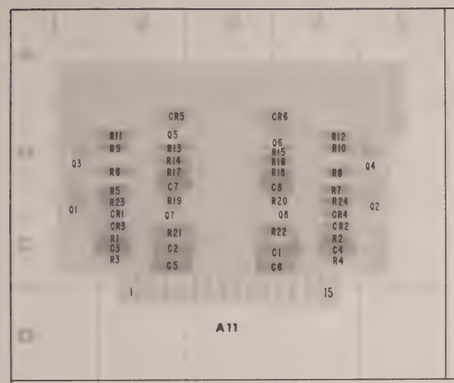

C1	4C	R1	2C
C2	2C	R2	4C
C3	2C	R3	2C
C4	4C	R4	4C
C5	2C	R5	2B
C6	4C	R6	2B
C7	2B	R7	4B
C8	4B	R8	4B
		R9	2B
CR1	2C	R10	4B
CR2	4C	R11	2B
CR3	2C	R12	4B
CR4	4C	R13	2B
CR5	2B	R14	2B
CR6	4B	R15	4B
		R16	4B
Q1	1C	R17	2B
Q2	5C	R18	4B
Q3	1B	R19	2C
Q4	5B	R20	4C
Q5	2B	R21	2C
Q6	4B	R22	4C
Q7	2C	R23	2C
Q8	4C	R24	4C

A11 GATE CONTROL AMPLIFIER ASSEMBLY TEST POINTS

1. Connect Square Wave Generator to both START and STOP inputs, and set for 100 kHz at 2.4V p-p.
2. Set Reversible Counter GATE CONTROL to EXTERNAL DUAL with polarity (rear panel) set to +.
3. Set Oscilloscope Sweep Time to 5 μs/cm, Sensitivity as shown with each waveform and externally sync Oscilloscope on 100 kHz gate control signal.
4. Check Test Points 1 through 9.

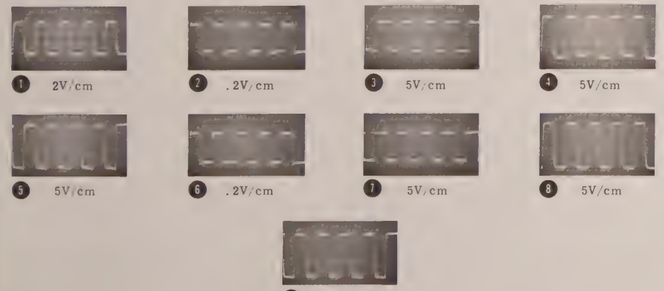

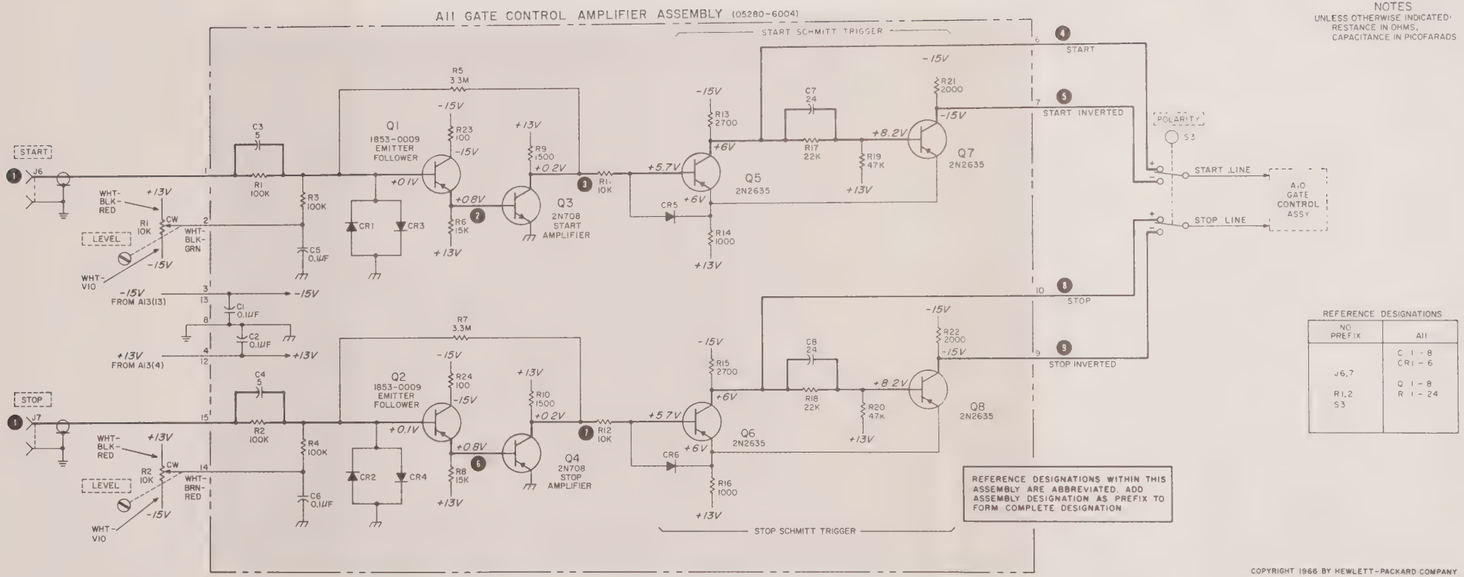

NOTES
UNLESS OTHERWISE INDICATED:
RESTANCE IN OHMS,
CAPACITANCE IN PICOFARADS

REFERENCE DESIGNATIONS

NO PREFIX	A11
J6,7	C 1 - 8 CR1 - 6
R1,2 S3	Q 1 - 8 R 1 - 24

COPYRIGHT 1966 BY HEWLETT-PACKARD COMPANY

05280-D-8

Figure 8-8. Gate Control Amplifier Assembly A11

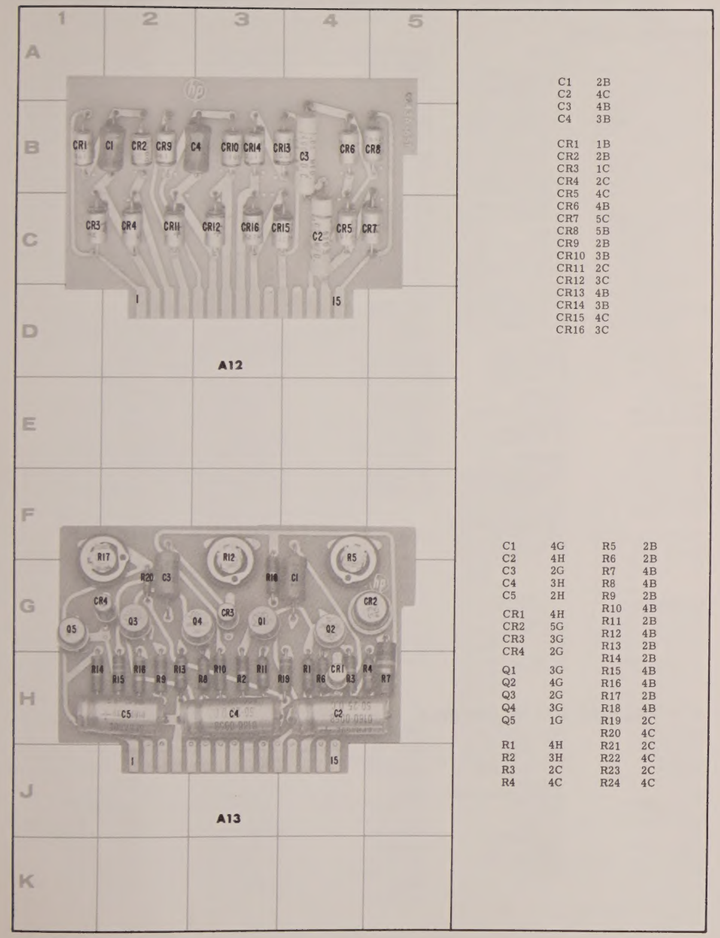

C1	2B		
C2	4C		
C3	4B		
C4	3B		
CR1	1B		
CR2	2B		
CR3	1C		
CR4	2C		
CR5	4C		
CR6	4B		
CR7	5C		
CR8	5B		
CR9	2B		
CR10	3B		
CR11	2C		
CR12	3C		
CR13	4B		
CR14	3B		
CR15	4C		
CR16	3C		

C1	4G	R5	2B
C2	4H	R6	2B
C3	2G	R7	4B
C4	3H	R8	4B
C5	2H	R9	2B
CR1	4H	R10	4B
CR2	5G	R11	2B
CR3	3G	R12	4B
CR4	2G	R13	2B
		R14	2B
Q1	3G	R15	4B
Q2	4G	R16	4B
Q3	2G	R17	2B
Q4	3G	R18	4B
Q5	1G	R19	2C
		R20	4C
R1	4H	R21	2C
R2	3H	R22	4C
R3	2C	R23	2C
R4	4C	R24	4C

02393-1
05245-A-17
05245-A-9

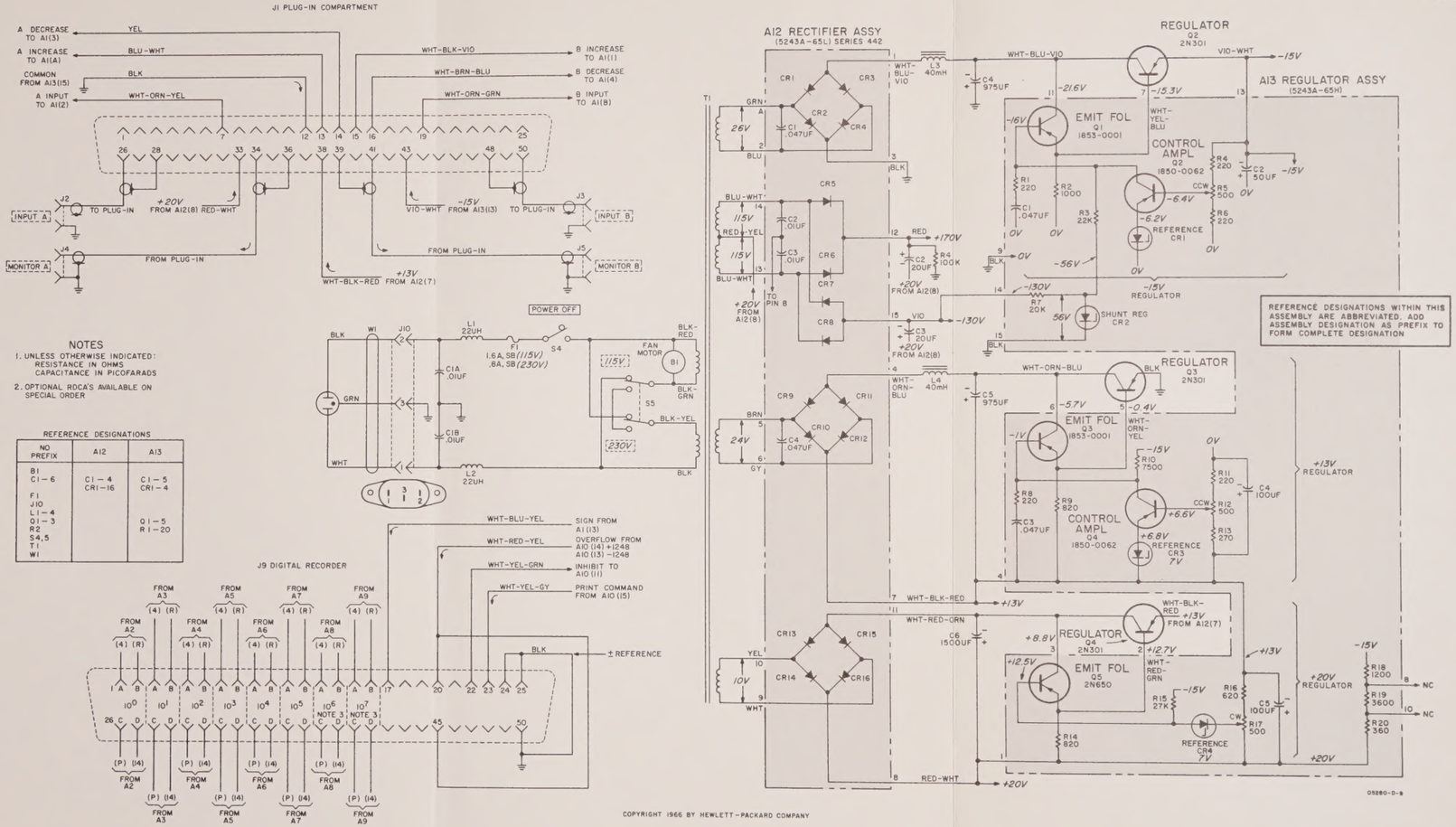

COPYRIGHT 1966 BY HEWLETT-PACKARD COMPANY

Figure 8-9. Power Supply: Rectifier Assembly A12
Regulator Assembly A13

ELECTRONIC INSTRUMENTATION SALES AND SERVICE
UNITED STATES, CANADA, CENTRAL AND SOUTH AMERICA

UNITED STATES

ALABAMA
P.O. Box 4207
2003 Byrd Spring Road S.W.
Huntsville 35802
TWX: 510-579-2204
Tel: (205) 881-4591

ARIZONA
3009 North Scottsdale Road
Scottsdale 85251
Tel: (602) 945-7601
TWX: 910-950-1282

232 South Tucson Boulevard
Tucson 85716
Tel: (602) 623-2564
TWX: 910-952-1162

CALIFORNIA
3939 Lankershim Boulevard
North Hollywood 91604
Tel: (213) 877-1282
TWX: 910-499-2170

1101 Embarcadero Road
Palo Alto 94303
Tel: (415) 327-6500
TWX: 910-373-1280

2591 Carlsbad Avenue
Sacramento 95821
Tel: (916) 482-1463
TWX: 910-367-2092

1055 Shafter Street
San Diego 92106
Tel: (714) 223-8103
TWX: 910-335-2000

COLORADO
7965 East Prentice
Englewood 80110
Tel: (303) 771-3455
TWX: 910-935-0705

CONNECTICUT
508 Tolland Street
East Hartford 06108
Tel: (203) 289-9394
TWX 710-425-3416

111 East Avenue
Norwalk 06851
Tel: (203) 853-1251
TWX: 710-468-3750

DELAWARE
3941 Kennett Pike
Wilmington 19807
Tel: (302) 655-6161
TWX: 510-666-2214

FLORIDA
Suite 106
9999 N.E. 2nd Avenue
Miami Shores 33138
Tel: (305) 758-3626
TWX: 810-848-7262

P.O. Box 20007
Herndon Station 32814
621 Commonwealth Avenue
Orlando
Tel: (305) 841-3970
TWX: 810-850-0113

P.O. Box 8128
Madeira Beach 33708
410 150th Avenue
St. Petersburg
Tel: (813) 391-0211
TWX: 810-863-0366

GEORGIA
3110 Maple Drive N.E.
Atlanta 30305
Tel: (404) 233-1141
TWX: 810-751-3283

ILLINOIS
5500 Howard Street
Skokie 60076
Tel: (312) 677-0400
TWX: 910-223-3613

INDIANA
4002 Meadows Drive
Indianapolis 46205
Tel: (317) 546-4891
TWX: 810-341-3263

LOUISIANA
P.O. Box 856
1942 Williams Boulevard
Kenner 70062
Tel: (504) 721-6201
TWX: 810-955-5524

MARYLAND
6707 Whitestone Road
Baltimore 21207
Tel: (301) 944-5400
TWX: 710-862-0850

P.O. Box 727
Twinbrook Station 20851
12303 Twinbrook Parkway
Rockville
Tel: (301) 427-7560
TWX: 710-828-9684

MASSACHUSETTS
Middlesex Turnpike
Burlington 01803
Tel: (617) 272-9000
TWX: 710-332-0382

MICHIGAN
24315 Northwestern Highway
Southfield 48076
Tel: (313) 353-9100
TWX: 810-232-1532

MINNESOTA
2459 University Avenue
St. Paul 55114
Tel: (612) 646-7881
TWX: 910-563-3734

MISSOURI
9208 Wyoming Place
Kansas City 64114
Tel: (816) 333-2445
TWX: 910-771-2087

2812 South Brentwood Blvd.
St. Louis 63144
Tel: (314) 644-0220
TWX: 910-760-1670

NEW JERSEY
Crystal Brook Prof. Bldg.
Route 35
Eatontown
Tel: (201) 747-1060

391 Grand Avenue
Englewood 07631
Tel: (201) 567-3933
TWX: 710-991-9707

NEW MEXICO
P.O. Box 8366
Station C 87108
6501 Lomas Boulevard N.E.
Albuquerque
Tel: (505) 255-5586
TWX: 910-989-1665

156 Wyatt Drive
Las Cruces 88001
Tel: (505) 526-2486
TWX: 910-983-0550

NEW YORK
1219 Campville Road
Endicott 13760
Tel: (607) 754-0050
TWX: 510-252-0890

236 East 75th Street
New York 10021
Tel: (212) 879-2023
TWX: 710-581-4376

82 Washington Street
Poughkeepsie 12601
Tel: (914) 454-7330
TWX: 510-248-0012

39 Saginaw Drive
Rochester 14623
Tel: (716) 473-9500
TWX: 510-253-5981

1025 Northern Boulevard
Roslyn, Long Island 11576
Tel: (516) 869-8400
TWX: 510-223-0811

5858 East Molloy Road
Syracuse 13211
Tel: (315) 454-2486
TWX: 710-541-0482

NORTH CAROLINA
P.O. Box 5187
1923 North Main Street
High Point 27262
Tel: (919) 882-6873
TWX: 510-926-1516

OHIO
5579 Pearl Road
Cleveland 44129
Tel: (216) 884-9209
TWX: 810-421-8500

1250 West Dorothy Lane
Dayton 45409
Tel: (513) 298-0351
TWX: 810-459-1925

OREGON
2737 S.W. Corbett Avenue
Portland 97201
Tel: (503) 228-5107

PENNSYLVANIA
Park Place Office Building
Camp Hill
Tel: (717) 737-6791

Monroe Complex
Moss Side Boulevard
Monroeville 15146
Tel: (412) 271-0724
TWX: 710-797-3650

144 Elizabeth Street
West Conshohocken 19428
Tel: (215) 248-1600, 828-6200
TWX: 510-660-8715

TEXAS
P.O. Box 7166
3605 Inwood Road
Dallas 75209
Tel: (214) 357-1881
TWX: 910-861-4081

P.O. Box 22813
4242 Richmond Avenue
Houston 77027
Tel: (713) 667-2407
TWX: 910-881-2645

GOVERNMENT CONTRACT OFFICE
225 Billy Mitchell Road
San Antonio 78226
Tel: (512) 434-4171
TWX: 910-871-1170

UTAH
2890 South Main Street
Salt Lake City 84115
Tel: (801) 486-8166
TWX: 910-925-5681

VIRGINIA
P.O. Box 6514
2111 Spencer Road
Richmond 23230
Tel: (703) 282-5451
TWX: 710-956-0157

WASHINGTON
11656 N.E. Eighth Street
Bellevue 98004
Tel: (206) 454-3971
TWX: 910-443-2303

FOR AREAS NOT LISTED, CONTACT:
Hewlett-Packard
1501 Page Mill Road
Palo Alto, California 94304
Tel: (415) 326-7000
TWX: 910-373-1267
Telex: 34-8461

CANADA

BRITISH COLUMBIA
Hewlett-Packard (Canada) Ltd.
2184 West Broadway
Vancouver
Tel: (604) 738-7520
TWX: 610-922-5050

ONTARIO
Hewlett-Packard (Canada) Ltd.
880 Lady Ellen Place
Ottawa 3
Tel: (613) 722-4223
TWX: 610-562-1952

Hewlett-Packard (Canada) Ltd.
1415 Lawrence Avenue West
Toronto
Tel: (416) 249-9196
TWX: 610-492-2382

QUEBEC
Hewlett-Packard (Canada) Ltd.
275 Hymus Boulevard
Pointe Claire
Tel: (514) 697-4232
TWX: 610-422-3022
Telex: 01-2819

FOR AREAS NOT LISTED, CONTACT:
Hewlett-Packard Inter-Americas
1501 Page Mill Road
Palo Alto, California 94304
Tel: (415) 326-7000
TWX: 910-373-1267
Telex: 034-8461
Cable: HEWPACK Palo Alto

CENTRAL AND SOUTH AMERICA

ARGENTINA
Mauricio A. Suárez
Telecomunicaciones
Carlos Calvo 224
Buenos Aires
Tel: 30-6312, 34-9087

BRAZIL
Ciental, Importação e Comércio Ltda.
Rua Cleto Campelo, 44 - 5° andar
Recife

Ciental, Importação e Comércio Ltda.
Avenida 13 de Maio, 13-22° andar
Rio de Janeiro, G.B.

Ciental, Importação e Comércio Ltda.
Rua Des. Eliseu Guilherme, 62
São Paulo 8
Tel: 70-2318

CHILE
Héctor Calcagni
Casilla 13942
Santiago
Tel: 490.505, 393.119

COSTA RICA
Lic. Alfredo Gallegos Gurdián
Apartado 3243
San José
Tel: 21-86-13

EL SALVADOR
Electrónica
Apartado Postal 1589
San Salvador
Tel: 4683

GUATEMALA
Olander Associates Latin America
Apartado 1226
7a. Calle, 0-22, Zona 1
Guatemala City
Tel: 22812

MEXICO
Hewlett-Packard Mexicana, S.A. de C.V.
Eugenia 408, Dept. 1
Mexico 12, D.F.

NICARAGUA
Roberto Terán G.
Edificio Terán
Apartado Postal 689
Managua
Tel: 3451, 3452

PANAMA
Electrónico Balboa, S.A.
P.O. Box 4929
Panama City
Tel: 3-0833

PERU
Fernando Ezeta B.
Av. Petit Thouars 4719
Casilla 3061
Lima
Tel: 50346

PUERTO RICO
San Juan Electronics, Inc.
Ponce de León No. 150, Stop 3
Pta. de Tierra Sta.
San Juan
Tel: (809) 725-3342

VENEZUELA
Citec, C.A.
Edif. Arisan-Of. #4
Avda. Francisco de Miranda
Apartado del Este 10934 Chacaito
Caracas
Tel: 71.88.05

FOR AREAS NOT LISTED, CONTACT:
Hewlett-Packard Inter-Americas
1501 Page Mill Road
Palo Alto, California 94304
Tel: (415) 326-7000
TWX: 910-373-1267
Telex: 034-8461
Cable: HEWPACK Palo Alto

ELECTRONIC INSTRUMENTATION SALES AND SERVICE
EUROPE, AFRICA, ASIA, AUSTRALIA

EUROPE

AUSTRIA
Unilabor HmbH
Wissenschaftliche Instrumente
Rummelhardtgasse 6/3
P.O. Box 33
Vienna IX/71
Tel: 426 181

BELGIUM
Hewlett-Packard Benelux S.A.
20-24 rue de l'Hôpital
Brussels
Tel: 11 22 20

DENMARK
Tage Olsen A/S
Rønnegade 1
Cophenhagen Ø
Tel: 29 48 00

FINLAND
INTO O/Y
Meritullinkatu 11
P.O. Box 10153
Helsinki 10
Tel: 61 133

FRANCE
Hewlett-Packard France
2 rue Tête d'Or
Lyon, 6 - Rhône
Tel: 52 35 66

Hewlett-Packard France
150 Boulevard Massena
Paris 13e
Tel: 707 97 19

GERMANY
Hewlett-Packard Vertriebs-GmbH
Lietzenburger Strasse 30
1 **Berlin W** 30
Tel: 24 86 36

Hewlett-Packard Vertriebs-GmbH
Herrenberger Strasse 110
703 **Böblingen**, Wüurttemberg
Tel: 6971

Hewlett-Packard Vertriebs-GmbH
Achenbachstrasse 15
4 **Düsseldorf** 1
Tel: 68 52 58

Hewlett-Packard Vertriebs-GmbH
Kurhessenstrasse 95
6 **Frankfurt** 50
Tel: 52 00 36

Hewlett-Packard Vertriebs-GmbH
Beim Strohhause 26
2 **Hamburg** 1
Tel: 24 05 52

Hewlett-Packard Vertriebs-GmbH
Reginfriedstrasse 13
8 **Munich** 9
Tel: 49 51 21

GREECE
Kostos Karayannis
18, Ermou Street
Athens 126
Tel: 230 301

IRELAND
Hewlett-Packard Ltd.
224 Bath Road
Slough, Bucks, England
Tel: Slough 28406-9, 29486-9

ITALY
Hewlett-Packard Italiana S.p.A.
Viale Lunigiana 46
Milan
Tel: 69 15 84

Hewlett-Packard Italiana S.p.A.
Palazzo Italia
Piazza Marconi 25
Rome - Eur
Tel: 591 2544

NETHERLANDS
Hewlett-Packard Benelux, N.V.
de Boelelaan 1043
Amsterdam, Z.2
Tel: 42 77 77

NORWAY
Morgenstierne & Co. A/S
Ingeniørfirma
6 Wessels Gate
Oslo
Tel: 20 16 35

PORTUGAL
Telectra
Rua Rodrigo da Fonseca 103
P.O. Box 2531
Lisbon 1
Tel: 68 60 72

SPAIN
Ataio Ingerieros
Urgel, 259
Barcelona, 11
Tel: 230-69-88

Ataio Ingenieros
Enrique Larreta 12
Madrid, 16
Tel: 235 43 44

SWEDEN
HP Instrument AB
Hagakersgatan 7
Mölndal
Tel: 031 - 27 68 00

HP Instrument AB
Centralvägen 28
Solna
Tel: 08 - 83 08 30

SWITZERLAND
HEWPAK AG
Zurcherstrasse 20
8952 Schlieren
Zurich
Tel: (051) 98 18 21

TURKEY
Telekom Engineering Bureau
P.O. Box 376 - Galata
Istanbul
Tel: 49 40 40

UNITED KINGDOM
Hewlett-Packard Ltd.
224 Bath Road
Slough, Bucks
Tel: Slough 28406-9, 29486-9

YUGOSLAVIA
Belram S.A.
83 avenue des Mimosas
Brussels 15, Belgium
Tel: 35 29 58

FOR AREAS NOT LISTED, CONTACT:
Hewlett-Packard S.A.
54 Route des Acacias
Geneva, Switzerland
Tel: (022) 42 81 50
Telex: 2.24.86
Cable: HEWPACKSA Geneva

AFRICA, ASIA, AUSTRALIA

AUSTRALIA
Sample Electronics (Vic) Pty., Ltd.
22-26 Weir Street
Glen Iris S.E. 6
Melbourne, Victoria
Tel: 20-1371 (4 lines)

Sample Electronics
(N.S.W.) Pty. Ltd.
4 Grose Street
Glebe, New South Wales
Tel: 69-6338

ETHIOPIA
African Salespower & Agency
Private Ltd., Co.
P. O. Box 718
Addis Ababa
Tel: 44090

INDIA
The Scientific Instrument Co., Ld
6, Tej Bahadur Sapru Road
Allahabad 1
Tel: 2451

The Scientific Instrument Co., Ld
240, Dr. Dadabhai Naoroji Road
Bombay 1
Tel: 26-2642

The Scientific Instr. Co., Ld.
11, Esplanade East
Calcutta 1
Tel: 23-4129

The Scientific Instrument Co., Ld.
30, Mount Road
Madras 2
Tel: 86339

The Scientific Instrument Co., Ld.
B-7, Ajmeri Gate Extn.
New Delhi 1
Tel: 27-1053

IRAN
Telecom, Ltd.
P. O. Box 1812
Teheran
Tel: 43850, 48111

ISRAEL
Electronics & Engineering
Division of Motorola Israel Ltd.
16, Kremenetski Street
Tel-Aviv
Tel: 35021/2/3

JAPAN
Yokogawa-Hewlett-Packard Ltd.
Shinhankyu Building
No. 8, Umeda
Kita-ku, **Osaka** City
Tel: 313-0091

Yokogawa-Hewlett-Packard Ltd.
Ito Building
No. 59, Kotori-cho
Nakamura-ku, **Nagoya** City
Tel: 551-0215

Yokgawa-Hewlett-Packard Ltd.
Ohashi Building
No. 59, I-chome, Yoyogi
Shibuya-ku, **Tokyo**
Tel: 370-2281

KENYA
R. J. Tilbury Ltd.
P. O. Box 2754
Suite 517/518
Hotel Ambassadeur
Nairobi
Tel: 25670, 26803, 68206

KOREA
American Trading Co., Korea, Ltd.
Seoul P. O. Box 1103
112-35 Sokong-Dong
Jung-ku, **Seoul**
Tel: 3.7049, 3.7613

LEBANON
Constantin E. Macridis
Clemenceau Street
Clemenceau Center
Beirut
Tel: 220846

NEW ZEALAND
Sample Electronics (N.Z.) Ltd.
8 Matipo Street
Onehunga S.E. 5
Auckland
Tel: 667-356

PAKISTAN (EAST)
Mushko & Company, Ltd.
Zirat Chambers
31, Jinnah Avenue
Dacca
Tel: 80058

PAKISTAN (WEST)
Mushko & Company, Ltd.
Oosman Chambers
Victoria Road
Karachi 3
Tel: 51027, 52927

SOUTH AFRICA
F. H. Flanter & Co. (Pty.), Ltd.
Rosella House
Buitencingle Street
Cape Town
Tel: 3-3817

F. H. Flanter & Co. (Pty.), Ltd.
104 Pharmacy House
80 Jorissen Street
Braamfontein, **Johannesburg**
Tel: 724-4172

TAIWAN
Hwa Sheng Electronic Co., Ltd.
P. O. Box 1558
21 Nanking West Road
Taipei
Tel: 46076, 45936

THAILAND
The International
Engineering Co., Ltd.
P. O. Box 39
614 Sukhumvit Road
Bangkok
Tel: 913460-1-2

FOR AREAS NOT LISTED, CONTACT:
Hewlett-Packard Export Marketing
1501 Page Mill Road
Palo Alto, California 94304
Tel: (415) 326-7000
Telex: 034-8461
Cable: HEWPACK Palo Alto

HEWLETT hp PACKARD

MP MASTER
MA24988

05280-9005

PRINTED IN U.S.A.